Town of Pomfret
Selectboard Meeting Agenda
Town Offices
5218 Pomfret Road, North Pomfret
November 18, 2026, 7:00 pm

Zoom instructions below

Business Items	
1. Call to Order	7:00 pm
2. Agenda Review	
3. Public Comment	
4. Town Administrator Report	
5. Road Foreman Report	
6. Items for Discussion or Vote a. Law Enforcement Services Contract (Sheriff-Elect Weyant) b. Culvert #59 Replacement Permit Applications and RFP c. FY 2028 Budget Discussion d. Hwy. Safety Improvement Program (HSIP) Grant Agreement e. F550 Purchase Offer f. Driveway Access Permit Application Form Amendment g. PACIF 2027 Coverage Elections h. Personnel Policy Updates i. New Town Website j. New Fire Engine 1 – Insurance, Title, and Use Agreement k. Warrants l. Approval of November 4, 2026 Minutes	7:15 pm
7. Meeting Wrap Up a. Correspondence b. Review of Assignments c. Agenda for Next Meeting	8:45 pm
8. Adjournment	
***Time frames are approximate**. Members of the public wishing to attend for specific business items are encouraged to arrive before the time indicated.*	

Zoom Instructions

- Computer or Smartphone
  https://zoom.us/j/95395079923?pwd=ZjBEd3ZuZWgvWmx2M0tpOE8zbjg2dz09
- Mobile Phone +19292056099,,95395079923#,,#,306922#
- Landline or Mobile Phone (301) 715 8592, then Meeting ID 953 9507 9923 and Passcode 306922

~~WINDSOR COUNTY SHERIFF'S DEPARTMENT~~

~~LAW ENFORCEMENT SERVICES CONTRACT~~

WINDSOR COUNTY SHERIFF'S DEPARTMENT

LAW ENFORCEMENT SERVICES CONTRACT

The following agreement is between the Windsor County Sheriff's Department (hereinafter referred to as "Sheriff's Department") and the Town of Pomfret, a governmental entity (hereinafter referred to as "Town") (individually, "Party," collectively, the "Parties").

RECITALS

The parties recite and declare:

A. The Sheriff's Department, as part of its normal business, provides law enforcement services on a contractual basis to governmental and nongovernmental entities.
B. The Town needs additional police presence in the Town to respond to police emergencies, enforce criminal laws, and enforce certain municipal ordinances, including the regulation of speed in the Town of Pomfret and other ordinances that the Town identifies to the Sheriff's Department.

NOW THEREFORE, in consideration of the mutual promises contained herein, and other valuable consideration provided, and intending to be legally bound by the terms of this Agreement, the Parties hereby agree to the following:

SECTION ONE

SERVICES TO BE PROVIDED

A. The Sheriff's Department shall provide to the Town fully equipped and trained Deputy ~~Sheriff's~~Sheriffs in patrol vehicles, and the Deputy ~~Sheriff's~~Sheriffs shall patrol the Town as follows. The patrol services shall average Ten (10) hours per week, to be spread over no less than Two (2) days per week. Patrol services shall be on days and times as agreed to by the Sheriff's Department and the Town. The Town may identify certain areas of the Town for particular focus by the Sheriff's Department, and the Sheriff's Department shall then concentrate its patrol in those areas. In addition to regular patrols, the Sheriff's Department shall provide emergency response services as needed.
B. It is understood and agreed that the above-mentioned services shall include, and not be limited to, the following activities: investigations; office work, such as compiling reports and arrest records; and court proceedings, which may include meeting with prosecutors, participating in depositions, and court appearances for hearing and trials.

C. The Town, from time to time, and no less than quarterly, shall provide the Sheriff's Department with its written assessment of the town's priorities likely to require law enforcement action. Patrol activities shall be scheduled to focus on these priorities. The Sheriff's Department shall provide quarterly reports to the Town that outline department statistics and activity, and the parties shall engage in discussions as needed to evaluate any issues or concerns, in order to keep a good working relationship.

SECTION TWO

TERM OF AGREEMENT

The Services to be provided under this Agreement will be for the period of July 1, ~~2025~~2026 to June 30, ~~2026~~2027.

SECTION THREE

LAW ENFORCEMENT

The Sheriff's Department shall enforce all state laws during the Agreement. In the event the Town identifies one or more Town ordinances to be enforced by the Sheriff's Department~~,~~ and provides copies of said ordinances to the Sheriff's Department, the Sheriff's Department shall enforce said ordinances. Notwithstanding the foregoing, the Sheriff's Department shall enforce any Town ordinance regulating the speed of motorized vehicles, regardless of whether the Town has identified that ordinance or provided a copy of that ordinance to the Sheriff's Department.

SECTION FOUR

CHARGES AND FEES

A. Regular Fee: The Sheriff's department shall charge an hourly fee of (i) $~~60~~75.00 ~~until~~for the ~~later of (x) December 31, 2025, and (y) the date on~~services set forth in Section One, which ~~at least 260 hours have been delivered under this Agreement, and (ii) $75.00 thereafter ("Regular Fee"). The Regular Fee~~ shall be invoiced and paid ~~monthly~~per month ("Regular Fee"). Mileage and regular office expenses are included in the Regular Fee. As provided in Section Five, the Sheriff's compensation is also included in the Regular Fee.
B. Extra Patrol Services may be requested and billed at $75.00 an hour for non-holidays. Extra Patrol services on State Holidays shall be billed at $100.00 an Hour. The Sheriff's Department will work to fill these requests, when possible, but they are not guaranteed.
C. Monthly Report: The Sheriff's Department shall provide a monthly summary of services provided during the month by the tenth (10th) day of each month following

the month services were incurred. The report will detail the hours worked and services provided.

SECTION FIVE

SHERIFF'S COMPENSATION INCLUDES AN AMOUNT FOR ADMINISTRATION

Pursuant to 24 VSA § 291a(c), the Sheriff, as administrator of the services to be provided under this Agreement, is entitled to compensation at a rate not to exceed 5% of the contract for work performed by the Sheriff's Department. The Sheriff's portion of the Regular Fee is already included in the Regular Fee set forth above.

SECTION SIX

PAYMENT OF FEES AND CHARGES

The Town agrees to pay the monthly portion of the Regular Fee, as defined herein, to the Sheriff's Department in full no later than 30 days following the receipt of each invoice.

SECTION SEVEN

EQUIPMENT

The Sheriff's Department shall provide whatever equipment its officers might need in order to carry out its duties under this Agreement. If any funds are provided to the Sheriff's Department from any source to purchase equipment that is used in the Town, the Town waives any ownership interest in any of that equipment.

SECTION EIGHT

OFFICER CONTROL AND DISCRETION

The Sheriff's Department shall, at all times, retain control of all police practices and decisions, except that Deputy Sheriff's shall not use their own private vehicles. These decisions shall include, but are not limited to, the forwarding of criminal offenses to the prosecutor and the follow-up of evidence of criminal activity. The Sheriff's Department and the Town agree that the duties and work assignments are to be conducted after mutual agreement by the Sheriff's Department and the Town as set forth in Section One. The

Town shall provide a single point of contact to the Sheriff's Department, for example, the Selectboard Chair or their designee, to deal with all issues related to this Agreement.

SECTION NINE

ENTIRE AGREEMENT

This Agreement shall constitute the entire agreement between the parties and that any prior understanding or representation of any kind preceding the date of this Agreement shall not be binding upon either Party except to the extent incorporated in the Agreement.

SECTION TEN

MODIFICATION OR TERMINATION OF AGREEMENT

A. The parties may amend this Agreement at any time by mutual agreement, evidenced by a writing signed by each Party or an authorized representative of each Party.

B. Any Party may terminate this Agreement at any time by providing at least thirty days' written notice thereof to the other Party.

SECTION ELEVEN

NOTICES

A. Any notice provided for or concerning this Agreement shall be in writing and deemed sufficiently given when sent by certified or registered mail or hand delivered, to the respective address of each Party, as provided below:

Town of Pomfret
~~Windsor County Sheriff's~~
~~Dept.~~5218 Pomfret Road
~~PO Box 478~~
Pomfret, VT 05053

Windsor County Sheriff's Dept.
62 Pleasant Street
Woodstock, VT 05091

B. In the event either Party changes its mailing address, the Party shall promptly provide written notice thereof to the other Party.



SECTION TWELVE

INSURANCE

The Sheriff's Department shall carry ~~liability~~lability insurance coverage, workmen's compensation for its officers, and such other insurance coverage, no less than the amounts set forth on the insurance certificate attached to this agreement as Schedule A, including coverage for any vehicles used in the performance of this agreement. The Sheriff's Department agrees to indemnify, defend and hold harmless the Town from any, and all, claims related to its work under this Agreement.

SECTION THIRTEEN

DISPUTE RESOLUTION

The Parties shall try to resolve any dispute between them by negotiation. In the event they are unable to resolve their dispute in a timely manner, not to exceed forty-five (45) days, the Parties agree to submit their dispute to mediation and to share equally in any mediation fee.

Dated: ~~Dated:~~

Windsor County Sheriff's ~~Office~~ Dept.

By: _____

Windsor County Sheriff's Representative

Dated: _____

Town of Pomfret

~~By:~~ ~~By:~~

~~Ryan P. Palmer, Sheriff~~ ~~Benjamin Brickner,~~ By:

_____

Town Manager or Selectboard Chair

~~Schedule A~~

~~Insurance Certificate~~

~~Attached.~~

TOWN OF POMFRET

POMFRET ROAD IMPROVEMENTS
CULVERT #59

CONTRACT DOCUMENTS

NOVEMBER 2026

DRAFT

ISSUED FOR: BID & CONSTRUCTION

PREPARED BY:

EAST ENGINEERING
CIVIL INFRASTRUCTURE

DRAFT



CONTRACT DOCUMENTS – TABLE OF CONTENTS

Town of Pomfret
Pomfret Road Improvements, Culvert 59

DRAFT

ITEM	SECTION
Front End Documents	
Advertisement to Bid	EJCDC C-111
Instructions to Bidders	EJCDC C-200
Bid Form	EJCDC C-410
Bid Bond	EJCDC C-430
Construction Agreement	EJCDC C-522
Measurement and Payment Terms	MP1 to MP2
Performance Bond	EJCDC C-610
Payment Bond	EJCDC C-615
Substantial Completion	EJCDC C-625
Technical Specifications	
General Requirements	01
VTrans Standard Specifications for Construction 2024 (Under Separate Cover)	
Permits	
• Army Corps of Engineers – General Permit, Preconstruction Notification (Pending)	
• VTANR – Stream Alteration (Pending)	
Drawings (Under separate cover)	
East Engineering plans: G-1.0, C-1.0, C-1.1 stamped "ISSUED FOR BID & CONSTRUCTION", dated November 9, 2026.	

THIS PAGE INTENTIONALLY BLANK

DRAFT

ADVERTISEMENT FOR BIDS

TOWN OF POMFRET
POMFRET ROAD IMPROVEMENTS, CULVERT 59

General Notice

The **Town of Pomfret** (Owner) is requesting Bids for the construction of the following Project:

Pomfret Road Improvements, Culvert 59

Bids for the construction of the Project will be received at the **Town Municipal Offices** located at **5218 Pomfret Road, North Pomfret, VT 05053** until **December 16, 2026 at 12:00 p.m.** Bids will be opened and reviewed by the Selectboard at their **December 16, 2026** meeting (starting at 7:00 p.m.).

The Project includes the following Work:

Town Highway improvements including a pipe arch, concrete headwalls, and associated improvements.

The Project has a contractual duration (final completion) of **60** days.

Obtaining the Bidding Documents

The Issuing Office for the Bidding Documents is:

East Engineering, PLC
Richmond, VT 05477

Neither Owner nor Engineer will be responsible for full or partial sets of Bidding Documents, including addenda, if any, obtained from sources other than the Issuing Office.

PDF sets of the Bidding Documents are available free of charge.

Pre-bid Conference

A mandatory pre-bid conference for the Project will be held on **December 2, 2026 at 9:30 a.m.** at the **Pomfret Road Project Site (near #6007 Pomfret Road,** 43.715254, -72.505951 **).** Bids will not be accepted from Bidders that do not attend the mandatory pre-bid conference.

Instructions to Bidders.

For all further requirements regarding bid submittal, qualifications, procedures, and contract award, refer to the Instructions to Bidders that are included in the Bidding Documents.

This Advertisement is issued by:

Owner: **Town of Pomfret**
Engineer: **East Engineering, PLC**

DRAFT

Copyright© 2018 National Society of Professional Engineers, American Council of Engineering Companies, and American Society of Civil Engineers. All rights reserved.

THIS PAGE INTENTIONALLY BLANK

DRAFT

Copyright© 2018 National Society of Professional Engineers, American Council of Engineering Companies, and American Society of Civil Engineers. All rights reserved.

INSTRUCTIONS TO BIDDERS FOR CONSTRUCTION CONTRACT

TABLE OF CONTENTS

Page

Article 1— Bidding Documents 1
Article 2— Qualifications of Bidders 1
Article 3— Pre-Bid Conference 2
Article 4— Site and Other Areas; Existing Site Conditions; Examination of Site 2
Article 5— Interpretations and Addenda 3
Article 6— Bid Security 3
Article 7— Contract Times 3
Article 8— Substitute and "Or Equal" Items 3
Article 9— Subcontractors, Suppliers, and Others 3
Article 10— Preparation of Bid 4
Article 11— Basis of Bid 4
Article 12— Submittal of Bid 4
Article 13— Modification and Withdrawal of Bid 5
Article 14— Opening of Bids 6
Article 15— Bids to Remain Subject to Acceptance 6
Article 16— Evaluation of Bids and Award of Contract 6
Article 17— Bonds and Insurance 7
Article 18— Signing of Agreement 7
Article 19— Sales and Use Taxes 7

DRAFT

Copyright© 2018 National Society of Professional Engineers, American Council of Engineering Companies, and American Society of Civil Engineers. All rights reserved.

ARTICLE 1—BIDDING DOCUMENTS

1.01 Bidder shall obtain a complete set of Bidding Requirements and proposed Contract Documents (together, the Bidding Documents). See the Agreement for a list of the Contract Documents. It is Bidder's responsibility to determine that it is using a complete set of documents in the preparation of a Bid. Bidder assumes sole responsibility for errors or misinterpretations resulting from the use of incomplete documents, by Bidder itself or by its prospective Subcontractors and Suppliers.

1.02 Plan rooms (including construction information subscription services, and electronic and virtual plan rooms) may distribute the Bidding Documents, or make them available for examination. Owner is not responsible for omissions in Bidding Documents or other documents obtained from plan rooms, or for a Bidder's failure to obtain Addenda from a plan room.

1.03 *Electronic Documents*

A. When the Bidding Requirements indicate that electronic (digital) copies of the Bidding Documents are available, such documents will be made available to the Bidders as Electronic Documents in the manner specified.

1. Bidding Documents will be provided in Adobe PDF (Portable Document Format) (.pdf) that is readable by Adobe Acrobat Reader. It is the intent of the Engineer and Owner that such Electronic Documents are to be exactly representative of the paper copies of the documents.

B. Unless otherwise stated in the Bidding Documents, the Bidder may use and rely upon complete sets of Electronic Documents of the Bidding Documents. However, Bidder assumes all risks associated with differences arising from transmission/receipt of Electronic Documents versions of Bidding Documents and reproductions prepared from those versions and, further, assumes all risks, costs, and responsibility associated with use of the Electronic Documents versions to derive information that is not explicitly contained in printed paper versions of the documents, and for Bidder's reliance upon such derived information.

C. After the Contract is awarded, the Owner will provide or direct the Engineer to provide for the use of the Contractor documents that were developed by Engineer as part of the Project design process, as Electronic Documents in native file formats.

1. Electronic Documents that are available in native file format include:

a. **AutoCAD Engineering Plans**

2. Release of such documents will be solely for the convenience of the Contractor. No such document is a Contract Document.

ARTICLE 2—QUALIFICATIONS OF BIDDERS

2.01 To demonstrate Bidder's qualifications to perform the Work, after submitting its Bid and within **10** days of Owner's request, Bidder may be required to submit the following information:

A. Written evidence establishing its qualifications such as financial data, previous experience, and present commitments.

B. A written statement that Bidder is authorized to do business in the state where the Project is located, or a written certification that Bidder will obtain such authority prior to the Effective Date of the Contract.

DRAFT

Copyright© 2018 National Society of Professional Engineers, American Council of Engineering Companies, and American Society of Civil Engineers. All rights reserved.

C. Bidder's state or other contractor license number, if applicable.

D. Subcontractor and Supplier qualification information.

E. Other required information regarding qualifications.

2.02 A Bidder's failure to submit required qualification information within the times indicated may disqualify Bidder from receiving an award of the Contract.

ARTICLE 3—PRE-BID CONFERENCE

3.01 A mandatory pre-bid conference will be held at the time and location indicated in the Advertisement or invitation to bid. Representatives of Owner and Engineer will be present to discuss the Project. Proposals will not be accepted from Bidders who do not attend the conference. It is each Bidder's responsibility to sign in at the pre-bid conference to verify its participation. Bidders must sign in using the name of the organization that will be submitting a Bid. A list of qualified Bidders that attended the pre-bid conference and are eligible to submit a Bid for this Project will be issued in an Addendum.

3.02 Information presented at the pre-Bid conference does not alter the Contract Documents. Owner will issue Addenda to make any changes to the Contract Documents that result from discussions at the pre-Bid conference. Information presented, and statements made at the pre-bid conference will not be binding or legally effective unless incorporated in an Addendum.

ARTICLE 4—SITE AND OTHER AREAS; EXISTING SITE CONDITIONS; EXAMINATION OF SITE

4.01 *Site and Other Areas*

A. The Site is identified in the Bidding Documents. By definition, the Site includes rights-of-way, easements, and other lands furnished by Owner for the use of the Contractor. Any additional lands required for temporary construction facilities, construction equipment, or storage of materials and equipment, and any access needed for such additional lands, are to be legally obtained and paid for by Contractor.

4.02 *Existing Site Conditions*

A. *Subsurface and Physical Conditions; Hazardous Environmental Conditions*

1. *Underground Facilities:* Underground Facilities are shown or indicated on the Drawings, as determined by the Owner, Engineer, and both private/public infrastructure owners.

2. *Hazardous Environmental Conditions:* Unknown.

DRAFT

Copyright© 2018 National Society of Professional Engineers, American Council of Engineering Companies, and American Society of Civil Engineers. All rights reserved.

ARTICLE 5—INTERPRETATIONS AND ADDENDA

5.01 Owner may issue Addenda to clarify, correct, supplement, or change the Bidding Documents.

5.02 Bidder shall submit all questions about the meaning or intent of the Bidding Documents to Engineer in writing.

5.03 Interpretations or clarifications considered necessary by Engineer in response to such questions will be issued by Addenda delivered to all registered plan holders. Questions received less than seven days prior to the date/time for opening of Bids may not be answered.

5.04 Only responses set forth in an Addendum will be binding. Oral and other interpretations or clarifications will be without legal effect. Responses to questions are not part of the Contract Documents unless set forth in an Addendum that expressly modifies or supplements the Contract Documents.

ARTICLE 6—BID SECURITY

6.01 A Bid must be accompanied by Bid security made payable to Owner in an amount of **5** percent of Bidder's total bid price in the form of a Bid bond issued by a surety. A certified or company check is an acceptable alternative to a bid bond.

ARTICLE 7—CONTRACT TIMES

7.01 The number of days within which, or the dates by which, the Work is to be (a) substantially completed and (b) ready for final payment are to be achieved, are set forth in the Agreement.

7.02 Provisions for liquidated damages, if any, for failure to timely attain Substantial Completion, or completion of the Work in readiness for final payment, are set forth in the Agreement.

ARTICLE 8—SUBSTITUTE AND "OR EQUAL" ITEMS

8.01 The Contract for the Work, as awarded, will be on the basis of materials and equipment specified or described in the Bidding Documents without consideration during the bidding and Contract award process of possible substitute or "or-equal" items. In cases in which the Contract allows the Contractor to request that Engineer authorize the use of a substitute or "or-equal" item of material or equipment, application for such acceptance may not be made to and will not be considered by Engineer until after the Effective Date of the Contract.

8.02 All prices that Bidder sets forth in its Bid will be based on the presumption that the Contractor will furnish the materials and equipment specified or described in the Bidding Documents, as supplemented by Addenda. Any assumptions regarding the possibility of post-Bid approvals of "or-equal" or substitution requests are made at Bidder's sole risk.

ARTICLE 9—SUBCONTRACTORS, SUPPLIERS, AND OTHERS

9.01 The apparent Successful Bidder, and any other Bidder so requested, must submit to Owner a list of the Subcontractors or Suppliers proposed for the Work within five days after Bid opening.

9.02 If requested by Owner, such list must be accompanied by an experience statement with pertinent information regarding similar projects and other evidence of qualification for each such Subcontractor or Supplier. If Owner or Engineer, after due investigation, has reasonable objection

DRAFT

Copyright© 2018 National Society of Professional Engineers, American Council of Engineering Companies, and American Society of Civil Engineers. All rights reserved.

to any proposed Subcontractor or Supplier, Owner may, before the Notice of Award is given, request apparent Successful Bidder to submit an acceptable substitute, in which case apparent Successful Bidder will submit a substitute, Bidder's Bid price will be increased (or decreased) by the difference in cost occasioned by such substitution, and Owner may consider such price adjustment in evaluating Bids and making the Contract award.

9.03 If apparent Successful Bidder declines to make any such substitution, Owner may award the Contract to the next lowest Bidder that proposes to use acceptable Subcontractors and Suppliers. Declining to make requested substitutions will constitute grounds for forfeiture of the Bid security of any Bidder. Any Subcontractor or Supplier, so listed and against which Owner or Engineer makes no written objection prior to the giving of the Notice of Award will be deemed acceptable to Owner and Engineer subject to subsequent revocation of such acceptance.

ARTICLE 10—PREPARATION OF BID

10.01 The Bid Form is included with the Bidding Documents.

A. All blanks on the Bid Form must be completed in ink and the Bid Form signed in ink. Erasures or alterations must be initialed in ink by the person signing the Bid Form. A Bid price must be indicated for each section, Bid item, alternate, adjustment unit price item, and unit price item listed therein.

10.02 The Bid must contain an acknowledgment of receipt of all Addenda, the numbers of which must be filled in on the Bid Form.

10.03 The bid must be signed by an authorized representative of the Contractor.

ARTICLE 11—BASIS OF BID

11.01 *Lump Sum*

A. Bidders must submit a Bid on a lump sum basis as set forth in the Bid Form.

11.02 *Unit Price*

A. Bidders must submit a Bid on a unit price basis for each item of Work listed in the unit price section of the Bid Form.

B. The "Bid Price" (sometimes referred to as the extended price) for each unit price Bid item will be the product of the "Estimated Quantity", which Owner or its representative has set forth in the Bid Form, for the item and the corresponding "Bid Unit Price" offered by the Bidder. The total of all unit price Bid items will be the sum of these "Bid Prices"; such total will be used by Owner for Bid comparison purposes.

C. Discrepancies between the multiplication of units of Work and unit prices will be resolved in favor of the unit prices. Discrepancies between the indicated sum of any column of figures and the correct sum thereof will be resolved in favor of the correct sum.

ARTICLE 12—SUBMITTAL OF BID

12.01 A Bid must be received no later than the date and time prescribed and at the place indicated in the Advertisement or invitation to bid and must be enclosed in a plainly marked envelope with the Project title, and, if applicable, the designated portion of the Project for which the Bid is

DRAFT

Copyright© 2018 National Society of Professional Engineers, American Council of Engineering Companies, and American Society of Civil Engineers. All rights reserved.

submitted, the name and address of Bidder, and must be accompanied by the Bid security and other required documents. If a Bid is sent by mail or other delivery system, the sealed envelope containing the Bid must be enclosed in a separate package plainly marked on the outside with the notation "BID ENCLOSED." A mailed Bid must be addressed to the location designated in the Advertisement. It is the Contractor's sole responsibility to ensure that the delivery was successfully received by the Owner prior to the date and time that bids are due.

A. Bids may not be submitted any earlier than three days prior to the due date and time indicated.

12.02 Emailed bids are not acceptable.

12.03 Bids received after the date and time prescribed for the opening of bids, or not submitted at the correct location or in the designated manner, will not be accepted and will be returned to the Bidder unopened.

ARTICLE 13—MODIFICATION AND WITHDRAWAL OF BID

13.01 An unopened Bid may be withdrawn by an appropriate document duly executed in the same manner that a Bid must be executed and delivered to the place where Bids are to be submitted prior to the date and time for the opening of Bids. Upon receipt of such notice, the unopened Bid will be returned to the Bidder.

13.02 If a Bidder wishes to modify its Bid prior to Bid opening, Bidder must withdraw its initial Bid in the manner specified in Paragraph 15.01 and submit a new Bid prior to the date and time for the opening of Bids.

13.03 If within 24 hours after Bids are opened any Bidder files a duly signed written notice with Owner and promptly thereafter demonstrates to the reasonable satisfaction of Owner that there was a material and substantial mistake in the preparation of its Bid, the Bidder may withdraw its Bid,

DRAFT

Copyright© 2018 National Society of Professional Engineers, American Council of Engineering Companies, and American Society of Civil Engineers. All rights reserved.

and the Bid security will be returned. Thereafter, if the Work is rebid, the Bidder will be disqualified from further bidding on the Work.

ARTICLE 14—OPENING OF BIDS

14.01 Bids will be opened at the time and place indicated in the advertisement or invitation to bid and, unless obviously non-responsive, read aloud publicly. A tabulation of the Bids will be made available to Bidders after the opening of Bids.

ARTICLE 15—BIDS TO REMAIN SUBJECT TO ACCEPTANCE

15.01 All Bids will remain subject to acceptance for the period of time stated in the Bid Form, but Owner may, in its sole discretion, release any Bid and return the Bid security prior to the end of this period.

ARTICLE 16—EVALUATION OF BIDS AND AWARD OF CONTRACT

16.01 Owner reserves the right to reject any or all Bids, including without limitation, nonconforming, nonresponsive, unbalanced, or conditional Bids. Owner also reserves the right to waive all minor Bid informalities, in their sole opinion.

16.02 Owner will reject the Bid of any Bidder that Owner finds, after reasonable inquiry and evaluation, to not be responsible.

16.03 If Owner awards the contract for the Work, such award will be to a responsible Bidder submitting a responsive Bid. Price will also be considered, however, the Owner reserves the right to award the project to the Contractor they believe, in their sole opinion, will be in the best interest of the Project (not necessarily the lowest bid).

16.04 *Evaluation of Bids*

A. In evaluating Bids, Owner will consider whether the Bids comply with the prescribed requirements, and such alternates, unit prices, and other data, as may be requested in the Bid Form or prior to the Notice of Award.

B. For the determination of the apparent low Bidder when unit price bids are submitted, Bids will be compared on the basis of the total of the products of the estimated quantity of each item and unit price Bid for that item, together with any lump sum items.

16.05 In evaluating whether a Bidder is responsible, Owner will consider the qualifications of the Bidder and may consider the qualifications and experience of Subcontractors and Suppliers proposed for

DRAFT

Copyright© 2018 National Society of Professional Engineers, American Council of Engineering Companies, and American Society of Civil Engineers. All rights reserved.

those portions of the Work for which the identity of Subcontractors and Suppliers must be submitted as provided in the Bidding Documents.

16.06 Owner may conduct such investigations as Owner deems necessary to establish the responsibility, qualifications, and financial ability of Bidders and any proposed Subcontractors or Suppliers.

ARTICLE 17—BONDS AND INSURANCE

17.01 Payment and Performance Bonds (100% of Contract Value), if included in the contract documents, are required by only the selected Contractor.

17.02 Insurance requirements are noted in subsequent sections of the bidding documents.

ARTICLE 18—SIGNING OF AGREEMENT

18.01 When Owner issues a Notice of Award to the Successful Bidder, it will be accompanied by the unexecuted counterparts of the Agreement along with the other Contract Documents as identified in the Agreement. Within 15 days thereafter, Successful Bidder must execute and deliver the required number of counterparts of the Agreement and any bonds and insurance documentation required to be delivered by the Contract Documents to Owner. Within 10 days thereafter, Owner will deliver one fully executed counterpart of the Agreement to Successful Bidder.

ARTICLE 19—SALES AND USE TAXES

19.01 Owner is exempt from **Vermont** state sales and use taxes on materials and equipment to be incorporated in the Work. (Exemption No. shall be provided to the selected Contractor). Said taxes must not be included in the Bid.

DRAFT

END OF C-200

Copyright© 2018 National Society of Professional Engineers, American Council of Engineering Companies, and American Society of Civil Engineers. All rights reserved.

BID FORM FOR CONSTRUCTION CONTRACT

ARTICLE 1—OWNER AND BIDDER

1.01 This Bid is submitted to: **Town of Pomfret**

1.02 The undersigned Bidder proposes and agrees, if this Bid is accepted, to enter into an Agreement with Owner in the form included in the Bidding Documents to perform all Work as specified or indicated in the Bidding Documents for the prices and within the times indicated in this Bid and in accordance with the other terms and conditions of the Bidding Documents.

ARTICLE 2—ATTACHMENTS TO THIS BID

2.01 The following documents are submitted with and made a condition of this Bid:

A. Required Bid security;

ARTICLE 3—BASIS OF BID—UNIT PRICES

3.01 *Unit Price Bids*

A. Bidder will perform the following Work at the indicated unit prices:

Item No.	Description	Unit	Estimated Quantity	Bid Unit Price	Bid Amount
1.0	**Pomfret Road Improvements, Culv59**				
1.1	Culvert Installation	LS	1	$	$
1.2	Cast-in-Place Concrete	CY	35	$	$
1.3	Ledge/Rock Removal	CY	20	$	$
Total of All Bid Items (Items 1.1 to 1.3)					$

DRAFT

B. Bidder acknowledges that:

1. each Bid Unit Price includes an amount considered by Bidder to be adequate to cover Contractor's overhead and profit for each separately identified item, and
2. estimated quantities are not guaranteed, and are solely for the purpose of comparison of Bids, and final payment for all Unit Price Work will be based on actual quantities, determined as provided in the Contract Documents, and
3. Any unbalanced unit pricing, or "pennied" items, will be honored by the Contractor, regardless of the final quantity constructed as part of the project.

Copyright© 2018 National Society of Professional Engineers, American Council of Engineering Companies, and American Society of Civil Engineers. All rights reserved.

ARTICLE 4—BIDDER'S ACKNOWLEDGEMENTS: ACCEPTANCE PERIOD, INSTRUCTIONS, AND RECEIPT OF ADDENDA

4.01 *Bid Acceptance Period*

A. This Bid will remain subject to acceptance for 30 days after the Bid opening, or for such longer period of time that Bidder may agree to in writing upon request of Owner.

4.02 *Instructions to Bidders*

A. Bidder accepts all of the terms and conditions of the Instructions to Bidders, including without limitation those dealing with the disposition of Bid security.

4.03 *Receipt of Addenda*

A. Bidder hereby acknowledges receipt of the following Addenda:

Addendum Number	Addendum Date

ARTICLE 5—BIDDER'S REPRESENTATIONS AND CERTIFICATIONS

5.01 *Bidder's Representations*

A. In submitting this Bid, Bidder represents the following:

1. Bidder has examined and carefully studied the Bidding Documents, including Addenda.
2. Bidder has visited the Site, conducted a thorough visual examination of the Site and adjacent areas, and become familiar with the general, local, and Site conditions that may affect cost, progress, and performance of the Work.
3. Bidder is familiar with all Laws and Regulations that may affect cost, progress, and performance of the Work.
4. Bidder has carefully studied the reports of explorations and tests of subsurface conditions at or adjacent to the Site and the drawings of physical conditions relating to existing surface or subsurface structures at the Site that have been identified in the Supplementary Conditions, with respect to the Technical Data in such reports and drawings.
5. Bidder has considered the information known to Bidder itself; information commonly known to contractors doing business in the locality of the Site; information and observations obtained from visits to the Site; and the Bidding Documents on (a) the cost, progress, and performance of the Work; (b) the means, methods, techniques, sequences, and procedures of construction to be employed by Bidder, if selected as Contractor; and (c) Bidder's (Contractor's) safety precautions and programs.
6. Based on the information and observations referred to in the preceding paragraph, Bidder agrees that no further examinations, investigations, explorations, tests, studies, or data

DRAFT

Copyright© 2018 National Society of Professional Engineers, American Council of Engineering Companies, and American Society of Civil Engineers. All rights reserved.

are necessary for the performance of the Work at the Contract Price, within the Contract Times, and in accordance with the other terms and conditions of the Contract.

7. Bidder is aware of the general nature of work to be performed by Owner and others at the Site that relates to the Work as indicated in the Bidding Documents.

8. Bidder has given Engineer written notice of all conflicts, errors, ambiguities, or discrepancies that Bidder has discovered in the Bidding Documents, and of discrepancies between Site conditions and the Contract Documents, and the written resolution thereof by Engineer is acceptable to Contractor.

9. The Bidding Documents are generally sufficient to indicate and convey understanding of all terms and conditions for performance and furnishing of the Work.

10. The submission of this Bid constitutes an incontrovertible representation by Bidder that without exception the Bid and all prices in the Bid are premised upon performing and furnishing the Work required by the Bidding Documents.

5.02 *Bidder's Certifications*

A. The Bidder certifies the following:

1. This Bid is genuine and not made in the interest of or on behalf of any undisclosed individual or entity and is not submitted in conformity with any collusive agreement or rules of any group, association, organization, or corporation.

2. Bidder has not directly or indirectly induced or solicited any other Bidder to submit a false or sham Bid.

3. Bidder has not solicited or induced any individual or entity to refrain from bidding.

4. Bidder has not engaged in corrupt, fraudulent, collusive, or coercive practices in competing for the Contract.

DRAFT

BIDDER hereby submits this Bid as set forth above:

Bidder: _____

(typed or printed name of organization)

By: _____

(individual's signature)

Name : _____

(typed or printed)

Title: _____

(typed or printed)

Date: _____

(typed or printed)

Copyright© 2018 National Society of Professional Engineers, American Council of Engineering Companies, and American Society of Civil Engineers. All rights reserved.

THIS PAGE INTENTIONALLY BLANK

DRAFT

Copyright© 2018 National Society of Professional Engineers, American Council of Engineering Companies, and American Society of Civil Engineers. All rights reserved.

BID BOND

Bidder Name: Address *(principal place of business)*:	**Surety** Name: Address *(principal place of business)*:
Owner Name: **Town of Pomfret** Address *(principal place of business)*:	**Bid** Project *(name and location)*: **Pomfret Road Improvements, Culvert 59** Bid Due Date:
Bond Penal Sum: **5%** Date of Bond:	
Surety and Bidder, intending to be legally bound hereby, subject to the terms set forth in this Bid Bond, do each cause this Bid Bond to be duly executed by an authorized officer, agent, or representative.	
Bidder	Surety
(Full formal name of Bidder)	*(Full formal name of Surety) (corporate seal)*
By: _____ *(Signature)*	By: _____ *(Signature) (Attach Power of Attorney)*
Name: _____ *(Printed or typed)*	Name: _____ *(Printed or typed)*
Title: _____	Title: _____
Attest: _____ *(Signature)*	Attest: _____ *(Signature)*
Name: _____ *(Printed or typed)*	Name: _____ *(Printed or typed)*
Title:	Title:
Notes: (1) Note: Addresses are to be used for giving any required notice. (2) Provide execution by any additional parties, such as joint venturers, if necessary.	

DRAFT

Copyright© 2018 National Society of Professional Engineers, American Council of Engineering Companies, and American Society of Civil Engineers. All rights reserved.

1. Bidder and Surety, jointly and severally, bind themselves, their heirs, executors, administrators, successors, and assigns to pay to Owner upon default of Bidder the penal sum set forth on the face of this Bond. Payment of the penal sum is the extent of Bidder's and Surety's liability. Recovery of such penal sum under the terms of this Bond will be Owner's sole and exclusive remedy upon default of Bidder.

2. Default of Bidder occurs upon the failure of Bidder to deliver within the time required by the Bidding Documents (or any extension thereof agreed to in writing by Owner) the executed Agreement required by the Bidding Documents and any performance and payment bonds required by the Bidding Documents.

3. This obligation will be null and void if:

   3.1. Owner accepts Bidder's Bid and Bidder delivers within the time required by the Bidding Documents (or any extension thereof agreed to in writing by Owner) the executed Agreement required by the Bidding Documents and any performance and payment bonds required by the Bidding Documents, or

   3.2. All Bids are rejected by Owner, or

   3.3. Owner fails to issue a Notice of Award to Bidder within the time specified in the Bidding Documents (or any extension thereof agreed to in writing by Bidder and, if applicable, consented to by Surety when required by Paragraph 5 hereof).

4. Payment under this Bond will be due and payable upon default of Bidder and within 30 calendar days after receipt by Bidder and Surety of written notice of default from Owner, which notice will be given with reasonable promptness, identifying this Bond and the Project and including a statement of the amount due.

5. Surety waives notice of any and all defenses based on or arising out of any time extension to issue Notice of Award agreed to in writing by Owner and Bidder, provided that the total time for issuing Notice of Award including extensions does not in the aggregate exceed 120 days from the Bid due date without Surety's written consent.

6. No suit or action will be commenced under this Bond prior to 30 calendar days after the notice of default required in Paragraph 4 above is received by Bidder and Surety, and in no case later than one year after the Bid due date.

7. Any suit or action under this Bond will be commenced only in a court of competent jurisdiction located in the state in which the Project is located.

8. Notices required hereunder must be in writing and sent to Bidder and Surety at their respective addresses shown on the face of this Bond. Such notices may be sent by personal delivery, commercial courier, or by United States Postal Service registered or certified mail, return receipt requested, postage pre-paid, and will be deemed to be effective upon receipt by the party concerned.

9. Surety shall cause to be attached to this Bond a current and effective Power of Attorney evidencing the authority of the officer, agent, or representative who executed this Bond on behalf of Surety to execute, seal, and deliver such Bond and bind the Surety thereby.

10. This Bond is intended to conform to all applicable statutory requirements. Any applicable requirement of any applicable statute that has been omitted from this Bond will be deemed to be included herein as if set forth at length. If any provision of this Bond conflicts with any applicable statute, then the provision of said statute governs and the remainder of this Bond that is not in conflict therewith continues in full force and effect.

11. The term "Bid" as used herein includes a Bid, offer, or proposal as applicable.

DRAFT

Copyright© 2018 National Society of Professional Engineers, American Council of Engineering Companies, and American Society of Civil Engineers. All rights reserved.

CONTRACT FOR CONSTRUCTION OF A SMALL PROJECT

This Contract is by and between Town of Pomfret (Owner) and _____ (Contractor).

Owner and Contractor hereby agree as follows:

ARTICLE 1 - THE WORK

1.01 Work

A. Work includes all labor, materials, equipment, services, and documentation necessary to construct the Project defined herein.

B. The Contractor shall complete all Work as specified or indicated in the Contract Documents. The Project is generally described as follows:

1. Town Highway improvements including a pipe arch culvert (#59) on Pomfret Road and associated improvements.

2. The Site of the Work includes property, easements, and designated work areas described in greater detail in the Contract Documents but generally located on Pomfret Road.

ARTICLE 2 - CONTRACT DOCUMENTS

2.01 Intent of Contract Documents

A. It is the intent of the Contract Documents to describe a functionally complete project. The Contract Documents do not indicate or describe all of the Work required to complete the Project. Additional details required for the correct installation of selected products are to be provided by the Contractor and coordinated with the Owner and Engineer. This Contract supersedes prior negotiations, representations, and agreements, whether written or oral. The Contract Documents are complementary; what is required by one part of the Contract Documents is as binding as if required by other parts of the Contract Documents.

B. During the performance of the Work and until final payment, Contractor and Owner shall submit all matters in question concerning the requirements of the Contract Documents, or relating to the acceptability of the Work under the Contract Documents to the Engineer. Engineer will be the initial interpreter of the requirements of the Contract Documents, and judge of the acceptability of the Work thereunder.

C. Engineer will render a written clarification, interpretation, or decision on the issue submitted, or initiate a modification to the Contract Documents.

D. Contractor, and its subcontractors and suppliers, shall not have or acquire any title to or ownership rights to any of the Drawings, Specifications, or other documents (including copies or electronic media editions) prepared by Engineer or its consultants.

DRAFT

Copyright © 2016 National Society of Professional Engineers, American Council of Engineering Companies, and American Society of Civil Engineers. All rights reserved.

2.02 Contract Documents Defined

A. The Contract Documents consist of the following documents:

1. This Contract.
2. Performance bond.
3. Payment bond.
4. Specifications listed in the Table of Contents.
5. Drawings as listed on the Drawing Sheet Index.
6. Addenda.

ARTICLE 3 - ENGINEER

3.01 Engineer

A. The Engineer for this Project is **East Engineering, PLC.**

ARTICLE 4 - CONTRACT TIMES

4.01 Contract Times

A. The Work will be substantially completed within **45** days after the Effective Date of the Contract and completed and ready for final payment within **60** days after the Effective Date of the Contract.

4.02 Liquidated Damages

A. Contractor and Owner recognize that time is of the essence in the performance of the Contract, and that Owner will incur damages if Contractor does not complete the Work according to the requirements of Paragraph 4.01. Because such damages for delay would be difficult and costly to determine, Owner and Contractor agree that as liquidated damages for delay (but not as a penalty) Contractor shall pay Owner $**500** for each day that expires after the Contract Time for substantial completion.

4.03 Delays in Contractor's Progress

A. If Owner, Engineer, or anyone for whom Owner is responsible, delays, disrupts, or interferes with the performance or progress of the Work, then Contractor shall be entitled to an equitable adjustment in the Contract Times and Contract Price. Contractor's entitlement to an adjustment of the Contract Times is conditioned on such adjustment being essential to Contractor's ability to complete the Work within the Contract Times.

B. Contractor shall not be entitled to an adjustment in Contract Price or Contract Times for delay, disruption, or interference caused by or within the control of Contractor or their subcontractors or suppliers.

C. If Contractor's performance or progress is delayed, disrupted, or interfered with by unanticipated causes not the fault of and beyond the control of Owner, Contractor, and those for which they are responsible, then Contractor shall be entitled to an equitable adjustment in Contract Times.

DRAFT

Copyright © 2016 National Society of Professional Engineers, American Council of Engineering Companies, and American Society of Civil Engineers. All rights reserved.

D. Contractor shall not be entitled to an adjustment in Contract Price or Contract Times for any delay, disruption, or interference if such delay is concurrent with a delay, disruption, or interference caused by or within the control of Contractor or Contractor's subcontractors or suppliers.

4.04 Progress Schedules

A. Contractor shall develop a progress schedule and submit to the Engineer for review and comment before starting Work on the Site. The Contractor shall modify the schedule in accordance with the comments provided by the Engineer.

B. The Contractor shall update and submit the progress schedule to the Engineer each month. The Owner may withhold payment if the Contractor fails to submit the schedule.

ARTICLE 5 - CONTRACT PRICE

5.01 Payment

A. Owner shall pay Contractor in accordance with the accepted Bid Form Schedule.

ARTICLE 6 - BONDS AND INSURANCE

6.01 Bonds

A. Before starting Work, Contractor shall furnish a performance bond and a payment bond from surety companies that are duly licensed or authorized to issue bonds in the required amounts in the jurisdiction in which the Project is located. Each bond shall be in an amount equal to the Contract Price, as security for the faithful performance and payment of all of Contractor's obligations under the Contract.

6.02 Insurance

A. Before starting Work, Contractor shall furnish evidence of insurance from companies that are duly licensed or authorized in the jurisdiction in which the Project is located. Contractor shall provide insurance in accordance with the following:

1. Contractor shall provide coverage for not less than the following amounts, or greater where required by Laws and Regulations:

a. Workers' Compensation:

State:	Statutory
Employer's Liability:	
Bodily Injury, each Accident	$ 1,000,000
Bodily Injury By Disease, each Employee	$ 1,000,000
Bodily Injury/Disease Aggregate	$ 1,000,000

b. Commercial General Liability:

General Aggregate	$ 2,000,000
Products - Completed Operations Aggregate	$ 2,000,000
Personal and Advertising Injury	$ 1,000,000

DRAFT

Copyright © 2016 National Society of Professional Engineers, American Council of Engineering Companies, and American Society of Civil Engineers. All rights reserved.

Each Occurrence (Bodily Injury and Property Damage) $ 1,000,000

c. Automobile Liability herein:

Combined Single Limit of: $ 1,000,000

ARTICLE 7 - CONTRACTOR'S RESPONSIBILITIES

7.01 Supervision and Superintendence

A. Contractor shall supervise and direct the Work competently and efficiently, devoting such attention thereto and applying such skills and expertise as may be necessary to perform the Work in accordance with the Contract Documents. Contractor shall be solely responsible for the means, methods, techniques, sequences, safety, and procedures of construction.

B. Contractor shall assign a competent resident superintendent who is to be present at all times during the execution of the Work. This resident superintendent shall not be replaced without written notice to and approval by the Owner and Engineer except under extraordinary circumstances.

C. Contractor shall at all times maintain good discipline and order at the Site.

D. Except as otherwise required for the safety or protection of persons or the Work or property at the Site or adjacent thereto, and except as otherwise stated in the Contract Documents, all Work at the Site shall be performed during regular working hours (7:00 a.m. to 6:00 p.m.), Monday through Friday. No work is allowed on any Federal holiday dates.

7.02 Other Work at the Site

A. In addition to and apart from the Work of the Contractor, other work may occur at or adjacent to the Site. Contractor shall take reasonable and customary measures to avoid damaging, delaying, disrupting, or interfering with the work of Owner, any other contractor, or any utility owner performing other work at or adjacent to the Site.

7.03 Services, Materials, and Equipment

A. Unless otherwise specified in the Contract Documents, Contractor shall provide and assume full responsibility for all services, materials, equipment, labor, transportation, construction equipment and machinery, tools, appliances, fuel, power, light, heat, telephone, water, sanitary facilities, temporary facilities, and all other facilities and incidentals necessary for the performance, testing, start up, and completion of the Work, whether or not such items are specifically called for in the Contract Documents.

B. All materials and equipment incorporated into the Work shall be new, of good quality and shall be stored, applied, installed, connected, erected, protected, used, cleaned, and conditioned in accordance with instructions of the applicable supplier, except as otherwise may be provided in the Contract Documents.

7.04 Subcontractors and Suppliers

A. Contractor may retain subcontractors and suppliers for the performance of parts of the Work. Such subcontractors and suppliers must be acceptable to Owner.

DRAFT

Copyright © 2016 National Society of Professional Engineers, American Council of Engineering Companies, and American Society of Civil Engineers. All rights reserved.

7.05 Quality Management

A. Contractor is fully responsible for the managing quality to ensure Work is completed in accordance with the Contract Documents.

7.06 Licenses, Fees and Permits

A. Contractor shall pay all license fees and royalties and assume all costs incident to performing the Work or the incorporation in the Work of any invention, design, process, product, or device which is the subject of patent rights or copyrights held by others.

B. Contractor shall obtain and pay for all construction permits and licenses unless otherwise provided in the Contract Documents.

7.07 Laws and Regulations; Taxes

A. Contractor shall give all notices required by and shall comply with all local, state, and federal Laws and Regulations applicable to the performance of the Work. Except where otherwise expressly required by applicable Laws and Regulations, neither Owner nor Engineer shall be responsible for monitoring Contractor's compliance with any Laws or Regulations.

B. Contractor shall bear all resulting costs and losses, and shall indemnify and hold harmless Owner and Engineer, and the officers, directors, members, partners, employees, agents, consultants, and subcontractors of each and any of them from and against all claims, costs, losses, and damages if Contractor performs any Work or takes any other action knowing or having reason to know that it is contrary to Laws or Regulations.

C. Contractor shall pay all applicable sales, consumer, use, and other similar taxes Contractor is required to pay in accordance with Laws and Regulations.

7.08 Record Documents

A. Contractor shall maintain one printed record copy of all Drawings, Specifications, Addenda, Change Orders, Work Change Directives, Field Orders, written interpretations and clarifications, and approved shop drawings in a safe place at the Site. Contractor shall annotate them to show changes made during construction. Contractor shall deliver these record documents to Engineer upon completion of the Work.

7.09 Safety and Protection

A. Contractor shall be solely responsible for initiating, maintaining, and supervising all safety precautions and programs in connection with the Work.

B. Contractor shall take all necessary precautions for the safety of, and shall provide the necessary protection to prevent damage, injury, or loss to:

1. All persons on the Site or who may be affected by the Work;

2. All the Work and materials and equipment to be incorporated therein, whether in storage on or off the Site; and

3. Other property at the Site or adjacent thereto, including trees, shrubs, lawns, walks, pavements, roadways, structures, other work in progress, utilities, and underground facilities not designated for removal, relocation, or replacement in the course of construction.

DRAFT

Copyright © 2016 National Society of Professional Engineers, American Council of Engineering Companies, and American Society of Civil Engineers. All rights reserved.

C. All damage, injury, or loss to any property caused, directly or indirectly, in whole or in part, by Contractor, or anyone for whose acts the Contractor may be liable, shall be remedied by Contractor at its expense (except damage or loss attributable to the fault of Contract Documents or to the acts or omissions of Owner or Engineer and not attributable, directly or indirectly, in whole or in part, to the fault or negligence of Contractor).

D. Contractor shall be responsible for coordinating any exchange of material safety data sheets or other hazard communication information required to be made available to or exchanged between or among employers at the Site in accordance with Laws or Regulations.

E. In emergencies affecting the safety or protection of persons or the Work or property at the Site or adjacent thereto, Contractor shall act to prevent threatened damage, injury, or loss. Contractor shall give Engineer prompt written notice if Contractor believes that any significant changes in the Work or variations from the Contract Documents have been caused thereby or are required as a result thereof. If Engineer determines that a change in the Contract Documents is required because of the action taken by Contractor in response to such an emergency, a Work Change Directive or Change Order will be issued.

7.10 Shop Drawings, Samples, and Other Submittals

A. Contractor shall review and coordinate the shop drawing and samples with the requirements of the Work and the Contract Documents and shall verify all related field measurements, quantities, dimensions, specified performance and design criteria, installation requirements, materials, catalog numbers, and similar information.

B. Each submittal shall bear a stamp or specific written certification that Contractor has satisfied Contractor's obligations under the Contract Documents with respect to Contractor's review of that submittal, and that Contractor approves the submittal.

C. With each submittal, Contractor shall give Engineer specific written notice, in a communication separate from the submittal, of any variations that the shop drawing or sample may have from the requirements of the Contract Documents.

D. Engineer will provide timely review of shop drawings and samples.

E. Engineer's review and approval will not extend to means, methods, techniques, sequences, or procedures of construction or to safety precautions or programs.

F. Engineer's review and approval of a separate item does not indicate approval of the assembly in which the item functions.

G. Contractor shall make corrections required by Engineer and shall return the required number of corrected copies of shop drawings and submit, as required, new samples for review and approval. Contractor shall direct specific attention in writing to revisions other than the corrections called for by Engineer on previous submittals.

H. Shop drawings are not Contract Documents.

7.11 Warranties and Guarantees

A. Contractor warrants and guarantees to Owner that all Work will be in accordance with the Contract Documents and will not be defective. Engineer and its officers, directors, members, partners, employees, agents, consultants, and subcontractors shall be entitled to rely on Contractor's warranty and guarantee.

DRAFT

Copyright © 2016 National Society of Professional Engineers, American Council of Engineering Companies, and American Society of Civil Engineers. All rights reserved.

7.12 Correction Period

A. If within one year after the date of substantial completion, any Work is found to be defective, or if the repair of any damages to the Site, adjacent areas that Contractor has arranged to use through construction easements or otherwise, and other adjacent areas used by Contractor as permitted by Laws and Regulations, is found to be defective, then Contractor shall promptly and without cost to Owner, correct such defective Work.

7.13 Indemnification

A. To the fullest extent permitted by Laws and Regulations, and in addition to any other obligations of Contractor under the Contract or otherwise, Contractor shall indemnify and hold harmless Owner and Engineer, and the officers, directors, members, partners, employees, agents, consultants and subcontractors of each and any of them from and against all claims, costs, losses, and damages (including but not limited to all fees and charges of engineers, architects, attorneys, and other professionals and all court or arbitration or other dispute resolution costs) arising out of or relating to the performance of the Work, provided that any such claim, cost, loss, or damage is attributable to bodily injury, sickness, disease, or death, or to injury to or destruction of tangible property (other than the Work itself), including the loss of use resulting therefrom but only to the extent caused by any negligent act or omission of Contractor, any subcontractor, any supplier, or any individual or entity directly or indirectly employed by any of them to perform any of the Work or anyone for whose acts they may be liable.

ARTICLE 8 - OWNER'S RESPONSIBILITIES

8.01 Owner's Responsibilities

A. Except as otherwise provided in the Contract Documents, Owner shall issue all communications to Contractor through Engineer.

B. Owner shall make payments to Contractor as provided in this Contract.

C. Owner shall provide Site and easements required to construct the Project.

D. If Owner intends to contract with others for the performance of other work at or adjacent to the Site, unless stated elsewhere in the Contract Documents, Owner shall have sole authority and responsibility for such coordination.

E. The Owner shall be responsible for performing inspections and tests required by applicable codes.

F. The Owner shall not supervise, direct, or have control or authority over, nor be responsible for, Contractor's means, methods, techniques, sequences, or procedures of construction, or the safety precautions and programs, or for any failure of Contractor to comply with Laws and Regulations applicable to the performance of the Work. Owner will not be responsible for Contractor's failure to perform the Work in accordance with the Contract Documents.

G. While at the Site, Owner's employees and representatives shall comply with the specific applicable requirements of Contractor's safety programs of which Owner has been informed.

H. Owner shall furnish copies of any applicable Owner safety programs to Contractor.

DRAFT

Copyright © 2016 National Society of Professional Engineers, American Council of Engineering Companies, and American Society of Civil Engineers. All rights reserved.

ARTICLE 9 - ENGINEER'S STATUS DURING CONSTRUCTION

9.01 Engineer's Status

A. Engineer will be Owner's representative during construction. The duties and responsibilities and the limitations of authority of Engineer as Owner's representative during construction are set forth in this Contract.

B. Neither Engineer's authority or responsibility under this Article 9 or under any other provision of the Contract, nor any decision made by Engineer in good faith either to exercise or not exercise such authority or responsibility or the undertaking, exercise, or performance of any authority or responsibility by Engineer, shall create, impose, or give rise to any duty in contract, tort, or otherwise owed by Engineer to Contractor, any subcontractor, any supplier, any other individual or entity, or to any surety for or employee or agent of any of them.

C. Engineer will make visits to the Site at intervals appropriate to the various stages of construction. Engineer will not be required to make exhaustive or continuous inspections on the Site to check the quality or quantity of the Work.

D. Engineer has the authority to reject Work if Contractor fails to perform Work in accordance with the Contract Documents.

E. Engineer will render decisions regarding the requirements of the Contract Documents, and judge the acceptability of the Work.

F. Engineer will not supervise, direct, control, or have authority over or be responsible for Contractor's means, methods, techniques, sequences, or procedures of construction, or the safety precautions and programs, or for any failure of Contractor to comply with Laws and Regulations applicable to the performance of the Work. Engineer will not be responsible for Contractor's failure to perform the Work in accordance with the Contract Documents.

ARTICLE 10 - CHANGES IN THE WORK

10.01 Authority to Change the Work

A. Without invalidating the Contract and without notice to any surety, Owner may, at any time or from time to time, order additions, deletions, or revisions in the Work.

10.02 Change Orders

A. Owner and Contractor shall execute appropriate Change Orders covering:

1. Changes in the Contract Price or Contract Times which are agreed to by the parties, including any undisputed sum or amount of time for Work actually performed in accordance with a Work Change Directive;

2. Changes in the Work which are: (a) ordered by Owner or (b) agreed to by the parties or (c) resulting from the Engineer's decision, subject to the need for Engineer's recommendation if the change in the Work involves the design (as set forth in the Drawings, Specifications, or otherwise), or other engineering or technical matters; and

3. Changes in the Contract Price or Contract Times or other changes which embody the substance of any final binding results under Article 12.

DRAFT

Copyright © 2016 National Society of Professional Engineers, American Council of Engineering Companies, and American Society of Civil Engineers. All rights reserved.

B. If the provisions of any bond require notice to be given to a surety of any change affecting the general scope of the Work or the provisions of the Contract Documents (including, but not limited to, Contract Price or Contract Times), the giving of any such notice will be Contractor's responsibility. The amount of each applicable bond will be adjusted to reflect the effect of any such change.

ARTICLE 11 - DIFFERING SUBSURFACE OR PHYSICAL CONDITIONS

11.01 Differing Conditions Process

A. If Contractor believes that any subsurface or physical condition including but not limited to utilities or other underground facilities that are uncovered or revealed at the Site either differs materially from that shown or indicated in the Contract Documents or is of an unusual nature, and differs materially from conditions ordinarily encountered and generally recognized as inherent in Work of the character provided for in the Contract Documents then Contractor shall, promptly after becoming aware thereof and before further disturbing the subsurface or physical conditions or performing any Work in connection therewith (except in an emergency), notify Owner and Engineer in writing about such condition. Contractor shall not further disturb such condition or perform any Work in connection therewith (except with respect to an emergency) until receipt of a written statement permitting Contractor to do so.

B. After receipt of written notice, Engineer will promptly:

1. Review the subsurface or physical condition in question;
2. Determine necessity for Owner obtaining additional exploration or tests with respect to the condition;
3. Determine whether the condition falls within the differing site condition as stated herein;
4. Obtain any pertinent cost or schedule information from Contractor;
5. Prepare recommendations to Owner regarding the Contractor's resumption of Work in connection with the subsurface or physical condition in question and the need for any change in the Drawings or Specifications; and
6. Advise Owner in writing of Engineer's findings, conclusions, and recommendations.

C. After receipt of Engineer's written findings, conclusions, and recommendations, Owner shall issue a written statement to Contractor regarding the subsurface or physical condition in question, addressing the resumption of Work in connection with such condition, indicating whether any change in the Drawings or Specifications will be made, and adopting or rejecting Engineer's written findings, conclusions, and recommendations, in whole or in part.

ARTICLE 12 - CLAIMS AND DISPUTE RESOLUTION

12.01 Claims Process

A. The party submitting a claim shall deliver it directly to the other party to the Contract and the Engineer promptly (but in no event later than 10 days) after the start of the event giving rise thereto.

DRAFT

Copyright © 2016 National Society of Professional Engineers, American Council of Engineering Companies, and American Society of Civil Engineers. All rights reserved.

B. The party receiving a claim shall review it thoroughly, giving full consideration to its merits. The two parties shall seek to resolve the claim through the exchange of information and direct negotiations. All actions taken on a claim shall be stated in writing and submitted to the other party.

C. If efforts to resolve a claim are not successful, the party receiving the claim may deny it by giving written notice of denial to the other party. If the receiving party does not take action on the claim within 45 days, the claim is deemed denied.

D. If the dispute is not resolved to the satisfaction of the parties, Owner or Contractor shall give written notice to the other party of the intent to submit the dispute to a court of competent jurisdiction unless the Owner and Contractor both agree to an alternative dispute resolution process.

ARTICLE 13 - TESTS AND INSPECTIONS; CORRECTION OF DEFECTIVE WORK

13.01 Tests and Inspections

A. Owner and Engineer will have access to the Site and the Work at reasonable times for their observation, inspection, and testing. Contractor shall provide them proper and safe conditions for such access.

B. Contractor shall give Engineer timely notice of readiness of the Work for all required inspections and tests, and shall cooperate with inspection and testing personnel to facilitate required inspections and tests.

C. If any Work that is to be inspected, tested, or approved is covered by Contractor without written concurrence of Engineer, Contractor shall, if requested by Engineer, uncover such Work for observation. Such uncovering shall be at Contractor's expense.

D. Concrete testing coordination and costs to be borne by the Contractor.

13.02 Defective Work

A. Contractor shall ensure that the Work is not defective.

B. Engineer has the authority to determine whether Work is defective, and to reject defective Work.

C. Prompt notice of all defective Work of which Owner or Engineer has actual knowledge will be given to Contractor.

D. The Contractor shall promptly correct all such defective Work.

E. When correcting defective Work, Contractor shall take no action that would void or otherwise impair Owner's special warranty and guarantee, if any, on said Work.

F. If the Work is defective or Contractor fails to supply sufficient skilled workers or suitable materials or equipment, or fails to perform the Work in such a way that the completed Work will conform to the Contract Documents, then Owner may order Contractor to stop the Work, or any portion thereof, until the cause for such order has been eliminated.

DRAFT

Copyright © 2016 National Society of Professional Engineers, American Council of Engineering Companies, and American Society of Civil Engineers. All rights reserved.

ARTICLE 14 - PAYMENTS TO CONTRACTOR

14.01 Progress Payments

A. The Contractor shall prepare a schedule of values that will serve as the basis for progress payments. The schedule of values will be in a form of application for payment acceptable to Engineer. The unit price breakdown submitted with the bid will be used for unit price work. Break lump sum items into units that will allow for measurement of Work in progress.

14.02 Applications for Payments:

A. Contractor shall submit an application for payment in a form acceptable to the Engineer, no more frequently than monthly, to Engineer. Applications for payment will be prepared and signed by Contractor. Contractor shall provide supporting documentation required by the Contract Documents. Payment will be paid for Work completed as of the date of the application for payment.

B. Beginning with the second application for payment, each application shall include an affidavit of Contractor stating that all previous progress payments received on account of the Work have been applied on account to discharge Contractor's legitimate obligations associated with prior applications for payment.

14.03 Retainage

A. The Owner shall retain **10** % of each progress payment until the Work is substantially complete.

14.04 Review of Applications

A. Within 10 days after receipt of each application for payment, the Engineer will either indicate in writing a recommendation for payment and present the application for payment to Owner or return the application for payment to Contractor indicating in writing Engineer's reasons for refusing to recommend payment. The Contractor will make the necessary corrections and resubmit the application for payment.

B. Engineer will recommend reductions in payment (set-offs) which, in the opinion of the Engineer, are necessary to protect Owner from loss because the Work is defective and requires correction or replacement.

C. The Owner is entitled to impose set-offs against payment based on any claims that have been made against Owner on account of Contractor's conduct in the performance of the Work, incurred costs, losses, or damages on account of Contractor's conduct in the performance of the Work, or liquidated damages that have accrued as a result of Contractor's failure to complete the Work.

14.05 Contractor's Warranty of Title

A. Contractor warrants and guarantees that title to all Work, materials, and equipment furnished under the Contract will pass to Owner free and clear of (1) all liens and other title defects, and (2) all patent, licensing, copyright, or royalty obligations, no later than seven days after the time of payment by Owner.

14.06 Substantial Completion

A. The Contractor shall notify Owner and Engineer in writing that the Work is substantially complete and request the Engineer issue a certificate of substantial completion when

DRAFT

Copyright © 2016 National Society of Professional Engineers, American Council of Engineering Companies, and American Society of Civil Engineers. All rights reserved.

Contractor considers the Work ready for its intended use. Contractor shall at the same time submit to Owner and Engineer an initial draft of punch list items to be completed or corrected before final payment.

B. Engineer will make an inspection of the Work with the Owner and Contractor to determine the status of completion. If Engineer does not consider the Work substantially complete, Engineer will notify Contractor and Owner in writing giving the reasons therefor.

C. If Engineer considers the Work substantially complete or upon resolution of all reasons for non-issuance of a certificate identified in 14.06.B, Engineer will deliver to Owner a certificate of substantial completion which shall fix the date of substantial completion and include a punch list of items to be completed or corrected before final payment.

14.07 Final Inspection

A. Upon written notice from Contractor that the entire Work is complete, Engineer will promptly make a final inspection with Owner and Contractor and will notify Contractor in writing of all particulars in which this inspection reveals that the Work, or agreed portion thereof, is incomplete or defective. Contractor shall immediately take such measures as are necessary to complete such Work or remedy such deficiencies.

14.08 Final Payment

A. Contractor may make application for final payment after Contractor has satisfactorily completed all Work defined in the Contract, including providing all maintenance and operating instructions, schedules, guarantees, bonds, certificates or other evidence of insurance, certificates of inspection, annotated record documents and other documents.

B. The final application for payment shall be accompanied (except as previously delivered) by:

1. All documentation called for in the Contract Documents;
2. Consent of the surety to final payment;
3. Satisfactory evidence that all title issues have been resolved such that title to all Work, materials, and equipment has passed to Owner free and clear of any liens or other title defects, or will so pass upon final payment;
4. A list of all disputes that Contractor believes are unsettled; and
5. Complete and legally effective releases or waivers (satisfactory to Owner) of all lien rights arising out of the Work, and of liens filed in connection with the Work.

C. The Work is complete (subject to surviving obligations) when it is ready for final payment as established by the Engineer's written recommendation of final payment.

14.09 Waiver of Claims

A. The making of final payment will not constitute a waiver by Owner of claims or rights against Contractor.

B. The acceptance of final payment by Contractor will constitute a waiver by Contractor of all claims and rights against Owner other than those pending matters that have been duly submitted.

DRAFT

Copyright © 2016 National Society of Professional Engineers, American Council of Engineering Companies, and American Society of Civil Engineers. All rights reserved.

ARTICLE 15 - SUSPENSION OF WORK AND TERMINATION

15.01 Owner May Suspend Work

A. At any time and without cause, Owner may suspend the Work or any portion thereof for a period of not more than 60 consecutive days by written notice to Contractor and Engineer. Such notice will fix the date on which Work will be resumed. Contractor shall resume the Work on the date so fixed. Contractor shall be entitled to an adjustment in the Contract Price or an extension of the Contract Times, or both, directly attributable to any such suspension.

15.02 Owner May Terminate for Cause

A. Contractor's failure to perform the Work in accordance with the Contract Documents or other failure to comply with a material term of the Contract Documents will constitute a default by Contractor and justify termination for cause.

B. If Contractor defaults in its obligations, then after giving Contractor and any surety ten days written notice that Owner is considering a declaration that Contractor is in default and termination of the Contract, Owner may proceed to:

1. Declare Contractor to be in default, and give Contractor and any surety notice that the Contract is terminated; and

2. Enforce the rights available to Owner under any applicable performance bond.

C. Owner may not proceed with termination of the Contract under Paragraph 15.02.B if Contractor within seven days of receipt of notice of intent to terminate begins to correct its failure to perform and proceeds diligently to cure such failure.

D. Subject to the terms and operation of any applicable performance bond, if Owner has terminated the Contract for cause, Owner may exclude Contractor from the Site, take possession of the Work, incorporate in the Work all materials and equipment stored at the Site or for which Owner has paid Contractor but which are stored elsewhere, and complete the Work as Owner may deem expedient.

E. In the case of a termination for cause, if the cost to complete the Work, including related claims, costs, losses, and damages, exceeds the unpaid contract balance, Contractor shall pay the difference to Owner.

15.03 Owner May Terminate for Convenience

A. Upon seven days written notice to Contractor, Owner may, without cause and without prejudice to any other right or remedy of Owner, terminate the Contract. In such case, Contractor shall be paid for, without duplication of any items:

1. Completed and acceptable Work executed in accordance with the Contract Documents prior to the effective date of termination, including fair and reasonable sums for overhead and profit on such Work;

2. Expenses sustained prior to the effective date of termination in performing services and furnishing labor, materials, or equipment as required by the Contract Documents in connection with uncompleted Work, plus fair and reasonable sums for overhead and profit on such expenses; and

3. Other reasonable expenses directly attributable to termination, including costs incurred to prepare a termination for convenience cost proposal.

DRAFT

Copyright © 2016 National Society of Professional Engineers, American Council of Engineering Companies, and American Society of Civil Engineers. All rights reserved.

B. Contractor shall not be paid on account of loss of anticipated overhead, profits, or revenue, or other economic loss arising out of or resulting from such termination.

15.04 Contractor May Stop Work or Terminate

A. If, through no act or fault of Contractor, (1) the Work is suspended for more than 90 consecutive days by Owner or under an order of court or other public authority, or (2) Owner fails for 30 days to pay Contractor any sum finally determined to be due, then Contractor may, upon seven days written notice to Owner, and provided Owner does not remedy such suspension or failure within that time, either stop the Work until payment is received, or terminate the Contract and recover payment from the Owner.

ARTICLE 16 - CONTRACTOR'S REPRESENTATIONS

16.01 Contractor Representations

A. Contractor makes the following representations when entering into this Contract:

1. Contractor has examined and carefully studied the Contract Documents, and any data and reference items identified in the Contract Documents.

2. Contractor has visited the Site, conducted a thorough visual examination of the Site and adjacent areas, and become familiar with and is satisfied as to the general, local, and Site conditions that may affect cost, progress, and performance of the Work.

3. Contractor is familiar with and is satisfied as to all Laws and Regulations that may affect cost, progress, and performance of the Work.

4. Contractor has considered the information known to Contractor itself; information commonly known to contractors doing business in the locality of the Site; information and observations obtained from visits to the Site; the Contract Documents; and the Site-related reports and drawings identified in the Contract Documents, with respect to the effect of such information, observations, and documents on:

   a. The cost, progress, and performance of the Work;

   b. The means, methods, techniques, sequences, and procedures of construction to be employed by Contractor; and

   c. Contractor's safety precautions and programs.

5. Based on the information and observations referred to in the preceding paragraph, Contractor agrees that no further examinations, investigations, explorations, tests, studies, or data are necessary for the performance of the Work at the Contract Price, within the Contract Times, and in accordance with the other terms and conditions of the Contract.

6. Contractor is aware of the general nature of work to be performed by Owner and others at the Site that relates to the Work as indicated in the Contract Documents.

7. Contractor has given Engineer written notice of all conflicts, errors, ambiguities, or discrepancies that Contractor has discovered in the Contract Documents, and the written resolution thereof by Engineer is acceptable to Contractor.

8. The Contract Documents are generally sufficient to indicate and convey understanding of all terms and conditions for performance and furnishing of the Work.

DRAFT

Copyright © 2016 National Society of Professional Engineers, American Council of Engineering Companies, and American Society of Civil Engineers. All rights reserved.

9. Contractor's entry into this Contract constitutes an incontrovertible representation by Contractor that, without exception, all prices in the Contract are premised upon performing and furnishing the Work required by the Contract Documents.

ARTICLE 17 - MISCELLANEOUS

17.01 Cumulative Remedies

A. The duties and obligations imposed by this Contract and the rights and remedies available hereunder to the parties hereto are in addition to, and are not to be construed in any way as a limitation of, any rights and remedies available to any or all of them which are otherwise imposed or available by Laws or Regulations, by special warranty or guarantee, or by other provisions of the Contract. The provisions of this paragraph will be as effective as if repeated specifically in the Contract Documents in connection with each particular duty, obligation, right, and remedy to which they apply.

17.02 Limitation of Damages

A. Neither Owner, Engineer, nor any of their officers, directors, members, partners, employees, agents, consultants, or subcontractors, shall be liable to Contractor for any claims, costs, losses, or damages sustained by Contractor on or in connection with any other project or anticipated project.

17.03 No Waiver

A. A party's non-enforcement of any provision shall not constitute a waiver of that provision, nor shall it affect the enforceability of that provision or of the remainder of this Contract.

17.04 Survival of Obligations

A. All representations, indemnifications, warranties, and guarantees made in, required by, or given in accordance with the Contract, as well as all continuing obligations indicated in the Contract, will survive final payment, completion, and acceptance of the Work or termination or completion of the Contract or termination of the services of Contractor.

17.05 Contractor's Certifications

A. Contractor certifies that it has not engaged in corrupt, fraudulent, collusive, or coercive practices in competing for or in executing the Contract.

17.06 Controlling Law

A. This Contract is to be governed by the law of the state in which the Project is located.

DRAFT

Copyright © 2016 National Society of Professional Engineers, American Council of Engineering Companies, and American Society of Civil Engineers. All rights reserved.

IN WITNESS WHEREOF, Owner and Contractor have signed this Contract.

This Contract will be effective on _____ (which is the Effective Date of the Contract).

OWNER:	CONTRACTOR:
Town of Pomfret	
By:	By:
Title:	Title:

END OF C-522

DRAFT

Copyright © 2016 National Society of Professional Engineers, American Council of Engineering Companies, and American Society of Civil Engineers. All rights reserved.

MEASUREMENT AND PAYMENT TERMS

1. General
    a. This document is used to define bid items listed in the Bid Form and on the Agreement.
2. Lump Sum and Unit Price Items
    a. Lump sum items will be paid on a percentage complete basis. Unit price items will be paid based on the actual quantities installed and verified by the Owner and Engineer. The items listed below are all-inclusive items for the complete installation of the proposed infrastructure improvements.

    Scope items listed below include the main construction tasks, but are not intended to be a comprehensive list of all required activities. Contractor shall include all required work items to complete the project in the items listed below.

    Item 1.0 Pomfret Road Improvements, Culvert 59
    Item 1.1 – Culvert Installation

- Payment: Percentage Complete.
- Mobilization of all equipment and materials to site,
- General conditions of the Contract Documents,
- Payment and Performance Bonds,
- Project coordination, communication, and administrative tasks,
- Permitting requirements and conditions,
- Temporary facilities including power, water, storage, and sewer/sanitary facilities,
- Protection of existing site features that are not impacted by construction including pavement, utilities, and vegetation,
- Site security,
- Site safety including temporary fencing, barricades, plates, and signage,
- Traffic control measures including detour signage, flaggers, and barricades,
- Construction layout for all components,
- Construct, maintain, and deconstruct the stream bypass or pumping system(s),
- Site clearing and grubbing (no clearing outside the easement limits),
- Erosion prevention and sediment control devices including silt fence and rolled erosion blankets,
- Demolition of existing structure,
- Temporary support of existing infrastructure, as needed,
- Excavation to the grades and limits shown on plans and dewatering of excavated areas, removal of excavated materials, and importing granular/roadway fill after installation of the culvert.
- Purchase, furnish, transport and installation of pipe arch and associated components
- Backfilling and compaction of structure backfill around culvert,
- New guardrails, guardrail posts, hardware, anchors, reflectors, and end treatments, including grading around end posts on road shoulder,

DRAFT

- Stone, riprap and slope armoring,
- Roadway fabric,
- Install, compact and grade roadway materials,
- Base and surface course pavement,
- Topsoil, seed, mulch, and erosion matting,
- Demobilization of all equipment and materials to site,
- Site cleanup and removal of all temporary facilities.

Item 1.2– Cast-in-Place Concrete

- Measurement and payment: Per cubic yard placed (waste concrete on-site will not be paid for and use of pumper truck on-site will deduct 1 CY from ticket).
- Reinforcing steel, ties, chairs, supports,
- Ledge anchors, including epoxy,
- Formwork, supports, and bracing,
- Concrete (VTrans Class A) and admixtures,
- Curing means/methods/compounds as well as cold weather protection (when applicable).
- Removal of forms and ties, patching of tie-holes, honey combing, and other blemishes.

Item 1.3 – Ledge/Rock Removal

- Payment: Per cubic yard. Payment limits are 1’ below footing/cutoff wall elevation or bottom of culvert, and 2’ horizontally from footing/side of culvert. Over excavation of ledge will not be paid.
- Mechanical removal of rock (blasting not allowed), transportation of waste rock, legal disposal, and replacement backfill.
- Boulders >4 CY in size will be considered ledge removal. Boulders <4 CY will be included in Item 1.1.

DRAFT

END MEASUREMENT AND PAYMENT SECTION

PERFORMANCE BOND

Contractor Name: Address *(principal place of business)*:	**Surety** Name: Address *(principal place of business)*:
Owner Name: **Town of Pomfret** Mailing address *(principal place of business)*:	**Contract** Description *(name and location)*: **Pomfret Road Improvements, Culvert 59** Contract Price: Effective Date of Contract:
Bond Bond Amount: Date of Bond: *(Date of Bond cannot be earlier than Effective Date of Contract)* Modifications to this Bond form: ☐ None ☐ See Paragraph 16	
Surety and Contractor, intending to be legally bound hereby, subject to the terms set forth in this Performance Bond, do each cause this Performance Bond to be duly executed by an authorized officer, agent, or representative.	
Contractor as Principal _____ *(Full formal name of Contractor)*	Surety _____ *(Full formal name of Surety) (corporate seal)*
By: _____ *(Signature)* Name: _____ *(Printed or typed)* Title: _____ Attest: _____ *(Signature)* Name: _____ *(Printed or typed)* Title: _____	By: _____ *(Signature)(Attach Power of Attorney)* Name: _____ *(Printed or typed)* Title: _____ Attest: _____ *(Signature)* Name: _____ *(Printed or typed)* Title: _____
Notes: (1) Provide supplemental execution by any additional parties, such as joint venturers. (2) Any singular reference to Contractor, Surety, Owner, or other party is considered plural where applicable.	

DRAFT

Copyright© 2018 National Society of Professional Engineers, American Council of Engineering Companies, and American Society of Civil Engineers. All rights reserved.

1. The Contractor and Surety, jointly and severally, bind themselves, their heirs, executors, administrators, successors, and assigns to the Owner for the performance of the Construction Contract, which is incorporated herein by reference.

2. If the Contractor performs the Construction Contract, the Surety and the Contractor shall have no obligation under this Bond, except when applicable to participate in a conference as provided in Paragraph 3.

3. If there is no Owner Default under the Construction Contract, the Surety's obligation under this Bond will arise after:

   3.1. The Owner first provides notice to the Contractor and the Surety that the Owner is considering declaring a Contractor Default. Such notice may indicate whether the Owner is requesting a conference among the Owner, Contractor, and Surety to discuss the Contractor's performance. If the Owner does not request a conference, the Surety may, within five (5) business days after receipt of the Owner's notice, request such a conference. If the Surety timely requests a conference, the Owner shall attend. Unless the Owner agrees otherwise, any conference requested under this Paragraph 3.1 will be held within ten (10) business days of the Surety's receipt of the Owner's notice. If the Owner, the Contractor, and the Surety agree, the Contractor shall be allowed a reasonable time to perform the Construction Contract, but such an agreement does not waive the Owner's right, if any, subsequently to declare a Contractor Default;

   3.2. The Owner declares a Contractor Default, terminates the Construction Contract and notifies the Surety; and

   3.3. The Owner has agreed to pay the Balance of the Contract Price in accordance with the terms of the Construction Contract to the Surety or to a contractor selected to perform the Construction Contract.

4. Failure on the part of the Owner to comply with the notice requirement in Paragraph 3.1 does not constitute a failure to comply with a condition precedent to the Surety's obligations, or release the Surety from its obligations, except to the extent the Surety demonstrates actual prejudice.

5. When the Owner has satisfied the conditions of Paragraph 3, the Surety shall promptly and at the Surety's expense take one of the following actions:

   5.1. Arrange for the Contractor, with the consent of the Owner, to perform and complete the Construction Contract;

   5.2. Undertake to perform and complete the Construction Contract itself, through its agents or independent contractors;

   5.3. Obtain bids or negotiated proposals from qualified contractors acceptable to the Owner for a contract for performance and completion of the Construction Contract, arrange for a contract to be prepared for execution by the Owner and a contractor selected with the Owners concurrence, to be secured with performance and payment bonds executed by a qualified surety equivalent to the bonds issued on the Construction Contract, and pay to the Owner the amount of damages as described in Paragraph 7 in excess of the Balance of the Contract Price incurred by the Owner as a result of the Contractor Default; or

   5.4. Waive its right to perform and complete, arrange for completion, or obtain a new contractor, and with reasonable promptness under the circumstances:

DRAFT

Copyright© 2018 National Society of Professional Engineers, American Council of Engineering Companies, and American Society of Civil Engineers. All rights reserved.

5.4.1 After investigation, determine the amount for which it may be liable to the Owner and, as soon as practicable after the amount is determined, make payment to the Owner; or

5.4.2 Deny liability in whole or in part and notify the Owner, citing the reasons for denial.

6. If the Surety does not proceed as provided in Paragraph 5 with reasonable promptness, the Surety shall be deemed to be in default on this Bond seven days after receipt of an additional written notice from the Owner to the Surety demanding that the Surety perform its obligations under this Bond, and the Owner shall be entitled to enforce any remedy available to the Owner. If the Surety proceeds as provided in Paragraph 5.4, and the Owner refuses the payment, or the Surety has denied liability, in whole or in part, without further notice, the Owner shall be entitled to enforce any remedy available to the Owner.

7. If the Surety elects to act under Paragraph 5.1, 5.2, or 5.3, then the responsibilities of the Surety to the Owner will not be greater than those of the Contractor under the Construction Contract, and the responsibilities of the Owner to the Surety will not be greater than those of the Owner under the Construction Contract. Subject to the commitment by the Owner to pay the Balance of the Contract Price, the Surety is obligated, without duplication for:

   7.1. the responsibilities of the Contractor for correction of defective work and completion of the Construction Contract;

   7.2. additional legal, design professional, and delay costs resulting from the Contractor's Default, and resulting from the actions or failure to act of the Surety under Paragraph 5; and

   7.3. liquidated damages, or if no liquidated damages are specified in the Construction Contract, actual damages caused by delayed performance or non-performance of the Contractor.

8. If the Surety elects to act under Paragraph 5.1, 5.3, or 5.4, the Surety's liability is limited to the amount of this Bond.

9. The Surety shall not be liable to the Owner or others for obligations of the Contractor that are unrelated to the Construction Contract, and the Balance of the Contract Price will not be reduced or set off on account of any such unrelated obligations. No right of action will accrue on this Bond to any person or entity other than the Owner or its heirs, executors, administrators, successors, and assigns.

10. The Surety hereby waives notice of any change, including changes of time, to the Construction Contract or to related subcontracts, purchase orders, and other obligations.

11. Any proceeding, legal or equitable, under this Bond must be instituted in any court of competent jurisdiction in the location in which the work or part of the work is located and must be instituted within two years after a declaration of Contractor Default or within two years after the Contractor ceased working or within two years after the Surety refuses or fails to perform its obligations under this Bond, whichever occurs first. If the provisions of this paragraph are void or prohibited by law, the minimum periods of limitations available to sureties as a defense in the jurisdiction of the suit will be applicable.

12. Notice to the Surety, the Owner, or the Contractor must be mailed or delivered to the address shown on the page on which their signature appears.

13. When this Bond has been furnished to comply with a statutory or other legal requirement in the location where the construction was to be performed, any provision in this Bond conflicting with said statutory or legal requirement will be deemed deleted therefrom and provisions conforming to such

DRAFT

Copyright© 2018 National Society of Professional Engineers, American Council of Engineering Companies, and American Society of Civil Engineers. All rights reserved.

statutory or other legal requirement will be deemed incorporated herein. When so furnished, the intent is that this Bond will be construed as a statutory bond and not as a common law bond.

14. Definitions

    14.1. *Balance of the Contract Price*—The total amount payable by the Owner to the Contractor under the Construction Contract after all proper adjustments have been made including allowance for the Contractor for any amounts received or to be received by the Owner in settlement of insurance or other claims for damages to which the Contractor is entitled, reduced by all valid and proper payments made to or on behalf of the Contractor under the Construction Contract.

    14.2. *Construction Contract*—The agreement between the Owner and Contractor identified on the cover page, including all Contract Documents and changes made to the agreement and the Contract Documents.

    14.3. *Contractor Default*—Failure of the Contractor, which has not been remedied or waived, to perform or otherwise to comply with a material term of the Construction Contract.

    14.4. *Owner Default*—Failure of the Owner, which has not been remedied or waived, to pay the Contractor as required under the Construction Contract or to perform and complete or comply with the other material terms of the Construction Contract.

    14.5. *Contract Documents*—All the documents that comprise the agreement between the Owner and Contractor.

15. If this Bond is issued for an agreement between a contractor and subcontractor, the term Contractor in this Bond will be deemed to be Subcontractor and the term Owner will be deemed to be Contractor.

16. Modifications to this Bond are as follows: **None**

DRAFT

Copyright© 2018 National Society of Professional Engineers, American Council of Engineering Companies, and American Society of Civil Engineers. All rights reserved.

PAYMENT BOND

Contractor	**Surety**
Name:	Name:
Address *(principal place of business)*:	Address *(principal place of business)*:
Owner	**Contract**
Name: **Town of Pomfret**	Description *(name and location)*: **Pomfret Road Improvements, Culvert 59**
Mailing address *(principal place of business)*:	Contract Price:
	Effective Date of Contract:
Bond	
Bond Amount:	
Date of Bond:	
(Date of Bond cannot be earlier than Effective Date of Contract)	
Modifications to this Bond form: ☐ None ☐ See Paragraph 18	
Surety and Contractor, intending to be legally bound hereby, subject to the terms set forth in this Payment Bond, do each cause this Payment Bond to be duly executed by an authorized officer, agent, or representative.	
Contractor as Principal	Surety
_____ *(Full formal name of Contractor)*	_____ *(Full formal name of Surety) (corporate seal)*
By: _____ *(Signature)*	By: _____ *(Signature)(Attach Power of Attorney)*
Name: _____ *(Printed or typed)*	Name: _____ *(Printed or typed)*
Title: _____	Title: _____
Attest: _____ *(Signature)*	Attest: _____ *(Signature)*
Name: _____ *(Printed or typed)*	Name: _____ *(Printed or typed)*
Title: _____	Title: _____
Notes: (1) Provide supplemental execution by any additional parties, such as joint venturers. (2) Any singular reference to Contractor, Surety, Owner, or other party is considered plural where applicable.	

DRAFT

Copyright© 2018 National Society of Professional Engineers, American Council of Engineering Companies, and American Society of Civil Engineers. All rights reserved.

1. The Contractor and Surety, jointly and severally, bind themselves, their heirs, executors, administrators, successors, and assigns to the Owner to pay for labor, materials, and equipment furnished for use in the performance of the Construction Contract, which is incorporated herein by reference, subject to the following terms.

2. If the Contractor promptly makes payment of all sums due to Claimants, and defends, indemnifies, and holds harmless the Owner from claims, demands, liens, or suits by any person or entity seeking payment for labor, materials, or equipment furnished for use in the performance of the Construction Contract, then the Surety and the Contractor shall have no obligation under this Bond.

3. If there is no Owner Default under the Construction Contract, the Surety's obligation to the Owner under this Bond will arise after the Owner has promptly notified the Contractor and the Surety (at the address described in Paragraph 13) of claims, demands, liens, or suits against the Owner or the Owner's property by any person or entity seeking payment for labor, materials, or equipment furnished for use in the performance of the Construction Contract, and tendered defense of such claims, demands, liens, or suits to the Contractor and the Surety.

4. When the Owner has satisfied the conditions in Paragraph 3, the Surety shall promptly and at the Surety's expense defend, indemnify, and hold harmless the Owner against a duly tendered claim, demand, lien, or suit.

5. The Surety's obligations to a Claimant under this Bond will arise after the following:

    5.1. Claimants who do not have a direct contract with the Contractor

        5.1.1. have furnished a written notice of non-payment to the Contractor, stating with substantial accuracy the amount claimed and the name of the party to whom the materials were, or equipment was, furnished or supplied or for whom the labor was done or performed, within ninety (90) days after having last performed labor or last furnished materials or equipment included in the Claim; and

        5.1.2. have sent a Claim to the Surety (at the address described in Paragraph 13).

    5.2. Claimants who are employed by or have a direct contract with the Contractor have sent a Claim to the Surety (at the address described in Paragraph 13).

6. If a notice of non-payment required by Paragraph 5.1.1 is given by the Owner to the Contractor, that is sufficient to satisfy a Claimant's obligation to furnish a written notice of non-payment under Paragraph 5.1.1.

7. When a Claimant has satisfied the conditions of Paragraph 5.1 or 5.2, whichever is applicable, the Surety shall promptly and at the Surety's expense take the following actions:

    7.1. Send an answer to the Claimant, with a copy to the Owner, within sixty (60) days after receipt of the Claim, stating the amounts that are undisputed and the basis for challenging any amounts that are disputed; and

    7.2. Pay or arrange for payment of any undisputed amounts.

    7.3. The Surety's failure to discharge its obligations under Paragraph 7.1 or 7.2 will not be deemed to constitute a waiver of defenses the Surety or Contractor may have or acquire as to a Claim, except as to undisputed amounts for which the Surety and Claimant have reached agreement. If, however, the Surety fails to discharge its obligations under Paragraph 7.1 or 7.2, the Surety shall indemnify the Claimant for the reasonable attorney's fees the Claimant incurs thereafter to recover any sums found to be due and owing to the Claimant.

DRAFT

Copyright© 2018 National Society of Professional Engineers, American Council of Engineering Companies, and American Society of Civil Engineers. All rights reserved.

8. The Surety's total obligation will not exceed the amount of this Bond, plus the amount of reasonable attorney's fees provided under Paragraph 7.3, and the amount of this Bond will be credited for any payments made in good faith by the Surety.

9. Amounts owed by the Owner to the Contractor under the Construction Contract will be used for the performance of the Construction Contract and to satisfy claims, if any, under any construction performance bond. By the Contractor furnishing and the Owner accepting this Bond, they agree that all funds earned by the Contractor in the performance of the Construction Contract are dedicated to satisfying obligations of the Contractor and Surety under this Bond, subject to the Owner's priority to use the funds for the completion of the work.

10. The Surety shall not be liable to the Owner, Claimants, or others for obligations of the Contractor that are unrelated to the Construction Contract. The Owner shall not be liable for the payment of any costs or expenses of any Claimant under this Bond, and shall have under this Bond no obligation to make payments to or give notice on behalf of Claimants, or otherwise have any obligations to Claimants under this Bond.

11. The Surety hereby waives notice of any change, including changes of time, to the Construction Contract or to related subcontracts, purchase orders, and other obligations.

12. No suit or action will be commenced by a Claimant under this Bond other than in a court of competent jurisdiction in the state in which the project that is the subject of the Construction Contract is located or after the expiration of one year from the date (1) on which the Claimant sent a Claim to the Surety pursuant to Paragraph 5.1.2 or 5.2, or (2) on which the last labor or service was performed by anyone or the last materials or equipment were furnished by anyone under the Construction Contract, whichever of (1) or (2) first occurs. If the provisions of this paragraph are void or prohibited by law, the minimum period of limitation available to sureties as a defense in the jurisdiction of the suit will be applicable.

13. Notice and Claims to the Surety, the Owner, or the Contractor must be mailed or delivered to the address shown on the page on which their signature appears. Actual receipt of notice or Claims, however accomplished, will be sufficient compliance as of the date received.

14. When this Bond has been furnished to comply with a statutory or other legal requirement in the location where the construction was to be performed, any provision in this Bond conflicting with said statutory or legal requirement will be deemed deleted here from and provisions conforming to such statutory or other legal requirement will be deemed incorporated herein. When so furnished, the intent is that this Bond will be construed as a statutory bond and not as a common law bond.

15. Upon requests by any person or entity appearing to be a potential beneficiary of this Bond, the Contractor and Owner shall promptly furnish a copy of this Bond or shall permit a copy to be made.

16. Definitions

    16.1. *Claim*—A written statement by the Claimant including at a minimum:

        16.1.1. The name of the Claimant;

        16.1.2. The name of the person for whom the labor was done, or materials or equipment furnished;

        16.1.3. A copy of the agreement or purchase order pursuant to which labor, materials, or equipment was furnished for use in the performance of the Construction Contract;

        16.1.4. A brief description of the labor, materials, or equipment furnished;

DRAFT

Copyright© 2018 National Society of Professional Engineers, American Council of Engineering Companies, and American Society of Civil Engineers. All rights reserved.

16.1.5. The date on which the Claimant last performed labor or last furnished materials or equipment for use in the performance of the Construction Contract;

16.1.6. The total amount earned by the Claimant for labor, materials, or equipment furnished as of the date of the Claim;

16.1.7. The total amount of previous payments received by the Claimant; and

16.1.8. The total amount due and unpaid to the Claimant for labor, materials, or equipment furnished as of the date of the Claim.

16.2. *Claimant*—An individual or entity having a direct contract with the Contractor or with a subcontractor of the Contractor to furnish labor, materials, or equipment for use in the performance of the Construction Contract. The term Claimant also includes any individual or entity that has rightfully asserted a claim under an applicable mechanic's lien or similar statute against the real property upon which the Project is located. The intent of this Bond is to include without limitation in the terms of "labor, materials, or equipment" that part of the water, gas, power, light, heat, oil, gasoline, telephone service, or rental equipment used in the Construction Contract, architectural and engineering services required for performance of the work of the Contractor and the Contractor's subcontractors, and all other items for which a mechanic's lien may be asserted in the jurisdiction where the labor, materials, or equipment were furnished.

16.3. *Construction Contract*—The agreement between the Owner and Contractor identified on the cover page, including all Contract Documents and all changes made to the agreement and the Contract Documents.

16.4. *Owner Default*—Failure of the Owner, which has not been remedied or waived, to pay the Contractor as required under the Construction Contract or to perform and complete or comply with the other material terms of the Construction Contract.

16.5. *Contract Documents*—All the documents that comprise the agreement between the Owner and Contractor.

17. If this Bond is issued for an agreement between a contractor and subcontractor, the term Contractor in this Bond will be deemed to be Subcontractor and the term Owner will be deemed to be Contractor.

18. Modifications to this Bond are as follows: **None.**

DRAFT

Copyright© 2018 National Society of Professional Engineers, American Council of Engineering Companies, and American Society of Civil Engineers. All rights reserved.

CERTIFICATE OF COMPLETION

Owner:	Town of Pomfret		
Engineer:	East Engineering	Engineer's Project No.:	090-01
Contractor:		Contractor's Project No.:	
Project:	Pomfret Road Improvements, Culvert 59		

This ☐ Substantial Completion ☐ Final Certificate of Completion applies to:

☐ All Work ☐ The following specified portions of the Work:

Date of Completion:

The Work to which this Certificate applies has been inspected by authorized representatives of Owner, Contractor, and Engineer, and found to be complete. The date of Substantial Completion marks the commencement of the contractual correction period and applicable warranties required by the Contract (one year).

A punch list of items to be completed or corrected is attached to this Certificate. This list may not be all-inclusive, and the failure to include any items on such list does not alter the responsibility of the Contractor to complete all Work in accordance with the Contract Documents.

The responsibilities between Owner and Contractor for operation, safety, maintenance, and insurance, is upon Owner's use of the Work must be as provided in the Contract, except as amended as follows:

Amendments to Owner's Responsibilities: ☐ None ☐ As follows:

Amendments to Contractor's Responsibilities: ☐ None ☐ As follows:

The following documents are attached to and made a part of this Certificate:

This Certificate does not constitute an acceptance of Work not in accordance with the Contract Documents, nor is it a release of Contractor's obligation to complete the Work in accordance with the Contract Documents.

Engineer

By *(signature)*: _____

Name *(printed)*: _____

Title: _____

DRAFT

Copyright© 2018 National Society of Professional Engineers, American Council of Engineering Companies, and American Society of Civil Engineers. All rights reserved.

THIS PAGE INTENTIONALLY BLANK

DRAFT

Copyright© 2018 National Society of Professional Engineers, American Council of Engineering Companies, and American Society of Civil Engineers. All rights reserved.

SPECIAL CONDITIONS AND TECHNICAL SPECIFICATIONS

EAST ENGINEERING, PLC

DRAFT

DRAFT

1. GENERAL REQUIREMENTS

a. PROJECT SUMMARY

i. This project includes a culvert replacement on Pomfret Road in the Town of Pomfret. Requirements are noted on the plans, permits, specifications, and contract documents.

ii. All components for this project will adhere to the State of Vermont, Agency of Transportation (VTrans), Standard Specifications for Construction, 2024, unless otherwise noted on the plans or within these specifications, or approved in writing from the Engineer.

b. GENERAL AND SPECIAL CONDITIONS

i. Proposed improvements are within a Town road right-of-way as well as private property (easement secured by Town). Contractor shall exercise caution while working to ensure areas outside of the limits of construction are not disturbed and the site is kept in a clean and neat manner.

ii. Portions of Owner property used for Contractor laydown area (equipment/material storage, staging, etc.) shall be protected from damage. Any damage shall be repaired by the contractor at no additional cost to the Owner. Additional laydown areas are to be obtained by Contractor, at no cost to the Owner.

iii. Working Days and Hours – Unless otherwise approved by the Engineer and Owner, working hours shall be 7:00 a.m. to 6:00 p.m. Work on the following days is prohibited:
   1. Saturday and Sunday
   2. New Years Day, Memorial Day, Independence Day, Labor Day, Thanksgiving Day, Day after Thanksgiving, Christmas Eve, Christmas Day.

iv. Permits – The following civil-scope permits are required to be followed throughout construction:
   1. Vermont Agency of Natural Resources (VT ANR) – Stream Alteration
   2. Army Corps of Engineers (ACOE) – General Permit

v. Hazardous Materials – During the duration of construction, if hazardous materials are detected, the contractor shall stop work and contact the Owner and Engineer prior to proceeding.

vi. Historic Preservation – If unanticipated historic and/or archaeological resources are found, the Contractor shall stop work and contact the Owner and Engineer prior to proceeding.

vii. Staging and Storage – The contractor shall utilize the Town road right-of-way for construction staging and material storage areas. The security and safety of the staging area is the sole responsibility of the Contractor. After construction is completed, the staging/storage areas shall be restored to pre-construction conditions or better.

DRAFT

viii. Davis Bacon Wage Rates – This project is not subject to the requirements of the Davis Bacon Act.

c. REFERENCED STANDARDS

i. State of Vermont, Agency of Transportation (VTrans), Standard Specifications for Construction, latest issue.
ii. VTrans Standard Drawings for Construction, latest revisions.
iii. American Association of State Highway and Transportation Officials (AASHTO)
iv. Manual on Uniform Traffic Control Devices (MUTCD)

d. PROJECT MEETINGS AND COORDINATION

i. Meetings
    1. Preconstruction Meeting – At least 10 days before beginning construction, the Owner, Contractor, and ANR personnel shall meet on-site to review the details of the project, discuss schedule, scope of work, party responsibilities, procedures for construction administration tasks (RFIs, CO's, Submittals, Payment Applications), special conditions and permitting requirements, and other applicable details of the project.

ii. Coordination
    1. Contractor Representatives
        a. The Contractor shall provide a full-time representative on site during all construction activities. The representative shall supervise all operations of the work and have authority to direct all Contractor personnel, subcontractors and material suppliers.
        b. The Contractor shall designate at least two designated responsible people to be available at all time after working hours (including weekends and holidays) to be available in the event of an emergency. Contact information (home and cell phone numbers) shall be provided to the Engineer and Owner.
    2. Construction Correspondence
        a. Submittals – Refer to Submittal Section for specific requirements.
        b. Request for Information (RFI) – RFI's shall be submitted by the Contractor to the Engineer in writing. The RFI shall include detailed information on the item requiring clarification including specification and/or drawing reference, a narrative explanation, and the requested response date.
        c. Change Orders (CO)– Prior to completing any work that the Contractor deems out of scope, a written request (Potential Change Order – "PCO") will be submitted to the Engineer and Owner. The PCO will include material, equipment, and labor rates and quantities of items to be installed with justification for the work.
        d. Payment Applications – A payment application shall be provided by the Contractor to the Owner noting progress percentages (lump sum

DRAFT

items) and quantities installed (unit price items). Lien releases will be provided to Owner with each payment application for each supplier that has an excess of $25,000.

e. SUBMITTALS

i. Submittals shall be provided to Engineer/Owner for materials and proceeds necessary to complete the required work. Submittals shall be provided in digital (PDF) format by email. Each submittal shall be legible and have clear indications/mark ups of the products/materials to be used. Each submittal will have a Contractor transmittal cover sheet with the referenced drawing/specification, date, and Contractor's signature indicating that the submitted product is in accordance with all project requirements. Required submittals are as follows:

1. Project schedule (provide updates as requested by Owner or Engineer)
2. Insurance certificates – Owner and East Engineering, PLC shall be listed as additionally insured.
3. Preconstruction photos and or videos.
4. Stream bypass means/methods submitted to ANR.
5. Aggregate borrow materials.
6. Culvert materials, including shop drawings

ii. Substitutions – If the Contractor prefers to use a product that differs from the drawings or specifications, a substitution submittal is required. Submittal will clearly compare the proposed material or product with the specified material or product.

iii. Engineer/Owner shall have 15 calendar days to review each submittal.

f. TEMPORARY FACILITIES AND CONSTRUCTION MEASURES

i. Storage Facilities – Contractor shall provide temporary on-site storage facilities to store materials and equipment. Contractor is responsible for the security and safety of all on-site materials and equipment. Any damaged or stolen materials or equipment shall be replaced at no cost to the Owner.

ii. Sanitary Facilities – Contractor shall provide adequate sanitary facilities at the job site for all Contactor, Engineer and Owner personnel. Facilities shall be regularly maintained and cleaned.

iii. Barricades, Fences and Safety Measures – Contractor is responsible for all site safety and protective measures. This includes all temporary barricades, fencing, plating, signage and other safety measures. All safety and protective measures shall meet applicable codes and standards.

iv. Traffic Control – Contractor shall install and maintain all construction warning signs in accordance with Vermont Agency of Transportation Standard Specifications and the Manual on Uniform Traffic Control Devices (MUTCD). All temporary signage shall be anchored with sandbags or equivalent methods to

DRAFT

ensure signs stay upright and in the appropriate position. Contractor shall regularly monitor signs, barricades, signals to ensure they remain in proper working order.

v. Environmental – Contractor shall install and maintain temporary environmental protective measures in accordance with applicable permitting documents and per the project drawings.

vi. Utilities – Existing utilities shall be maintained at all times. Contractor is responsible for all DigSafe requirements. Coordination with utility authorities shall be a Contractor responsibility – this includes temporary supports, "pole-holds", line shielding and associated tasks. Contractor shall coordinate with all utilities in the area that are not members of DigSafe to maintain all existing infrastructure. Protection of all utilities in the project area is a requirement. All repairs, damages, or other penalties shall be borne by the Contractor.

g. SITE DEMOLITION

i. The Contractor shall demolish and/or modify all existing structures, facilities, and utilities as indicated on the drawings or specified herein. The Contractor shall furnish all materials, equipment, and labor to execute the work.

ii. Demolished materials shall be legally disposed of at an approved facility by the Contractor. The Contractor is responsible for all costs to dispose of the material including labor, equipment, materials, trucking, and disposal fees.

h. SITE CLEARING AND GRUBBING

i. Contractor shall clear and grub all necessary materials to complete the project within the limits of disturbance shown on project plans. Applicable items include: trees, shrubs, stumps, topsoil, snow/ice, trash/rubbish.

1. Topsoil shall be segregated from other materials and stockpiled (using applicable erosion prevention and sediment control measures) for reuse during restoration of the site.
2. Tree limbs and brush/vegetation may be mulched for EPSC measures or removed from site. No burning is allowed.
3. Hardwood trees (excluding limbs) removed as part of the proposed repairs shall be removed from site or chipped on-site.
4. Contractor to legally dispose of all materials at no expense to the Owner.

i. EROSION PREVENTION AND SEDIMENT CONTROL (EPSC)

i. Contractor shall install, maintain and upon completion of construction, remove erosion prevention and sediment control measures. Contractor shall comply with:

1. Vermont Erosion Prevention and Sediment Control Field Guide – Vermont Department of Environmental Conservation, Most Current Version.
2. The Vermont Standards & Specifications for Erosion Prevention & Sediment Control – Vermont Department of Environmental Conservation, Most Current Version.

DRAFT

j. PROTECTION AND REPAIR OF PROPERTY AND EXISTING INFASTRUCTURE

i. Contractor shall be responsible for protecting, maintaining and repairing or replacing site features during construction including:

1. Underground Utilities – All DigSafe responsibilities are a responsibility of the Contractor as noted in previous sections.
2. Overhead utilities shall be maintained and protected at all times. Temporary support(s) and/or pole hold(s) and/or relocation(s) shall be coordinated with the authority having jurisdiction. All temporary measures needed/required by the authority having jurisdiction shall be paid for by the Contractor. Any damage to existing poles or overhead utilities shall be paid for by the Contractor.
3. Lawns, Grasses and Landscaping/Plantings – Contractor is responsible for restoring lawns and grass areas. Landscaping/plantings shall be replaced in-kind. Any pruning or cutting of branches shall be done in a neat and professional manner – cut ends of branches to be sealed by an acceptable arbor product within 24 hours of cutting.
4. Survey monuments and markers – If existing survey markers or monuments are disturbed, Contractor shall pay a Professional Licensed Surveyor (registered in Vermont) to reset.
5. Pavements – Pavement and driveways that are to remain shall not be damaged. If existing pavement and driveway areas are to be used as material stockpile and/or equipment parking areas, Contractor shall provide adequate temporary measures to protect the infrastructure from damage. Damaged pavements and driveways (as determined by Engineer or Owner) shall be removed and replaced by the Contractor at no cost to the Owner.
6. Mailboxes – If mailboxes are in the area of disturbance, they shall be temporarily relocated/reset during construction to the satisfaction of the landowner and post office. After construction, mailboxes shall be reset to their original locations to the satisfaction of the landowner, post office and Engineer.

DRAFT

k. CULVERTS

i. Pipe Arch

1. Loading: HL-93
2. Polymer-coated, galvanized.
3. Depth of cover 7-10'+
4. Dimensions and specifications on Project Plans.

l. RECORD DRAWINGS

i. The Contractor is responsible to keep one set of record drawings throughout the construction of the project. Differing conditions and actual locations/elevations of proposed improvements shall be clearly/neatly documented and dimensioned in red-pen or completed digitally in a PDF.

m. PROJECT CLOSEOUT

i. Substantial Completion – Contractor will notify the Engineer and Owner when the project is ready to be inspected for Substantial Completion. Owner, Engineer and Contractor will conduct a walkthrough and document any outstanding items that remain to be completed (punchlist). If the Engineer and Owner determine that the completed work is substantially complete, a certificate will be issued with a final punch list.

ii. Final Completion – Using the punchlist, the Contractor will complete all outstanding work items, remove temporary facilities, and conduct final cleaning of all work areas to the satisfaction of the Engineer and Owner. After completion of the punch list, Owner, Engineer and Contractor will conduct a final walkthrough. If satisfied, Owner and Engineer will release the certificate of final completion.

END OF TECHNICAL SPECIFICATIONS

DRAFT

POMFRET ROAD & WILD APPLE ROAD CULVERT REPLACEMENTS

HIGHWAY FOREMAN
FRANK ROGERS

SELECTBOARD
BENJAMIN BRICKNER, CHAIR
JOHN PETERS JR, VICE-CHAIR
ERIC CHASE
EMILY GRUBE
KYLE HANSEN

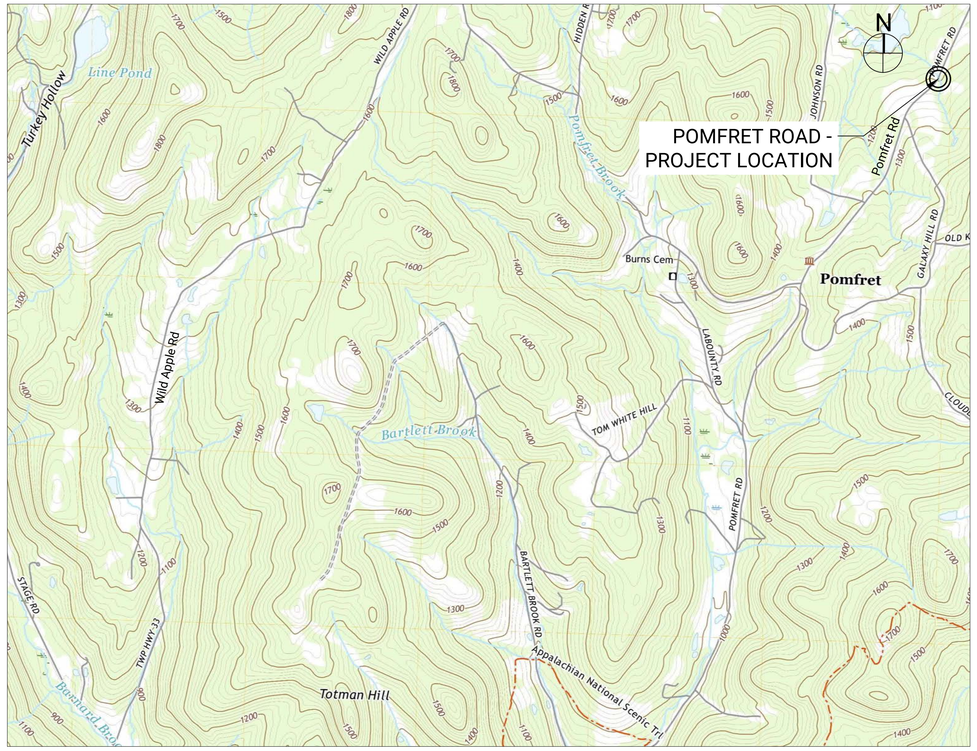

Sheet List Table	
Sheet	Sheet Title
G-1.0	TITLE PAGE
C-1.0	POMFRET ROAD SITE PLAN
C-1.1	DETAILS

POMFRET ROAD SITE

Roadway Design Information
Town Highway Number: 1
Annual Average Daily Traffic (AADT), Current: Est. 989
AADT, Design Forecast (20 Year): Est. <1,500

Proposed Structure Design Information
Local ID Number: #59
Northing/Easting: 43.7153 / -72.5059
Structure Type: Polymer Coated Pipe Arch
Design Live Load: HL-93
Clear Span: ~81"X59"

Hydraulic Design Information
Waterbody: Un-named Tributary to Mill Brook
Drainage Area: ~0.1 mi^2
Design Flow (Q50): 30 cfs
Stone Armor Min. Size: VTrans Specification E1

TOWN OF POMFRET, VERMONT

NOVEMBER 2026

EAST ENGINEERING
CIVIL INFRASTRUCTURE
(802) 989-6686
WWW.EASTENGINEERINGPLC.COM

STATE OF VERMONT · TYLER D. BILLINGSLEY · NO. 69581 · CIVIL · LICENSED · PROFESSIONAL ENGINEER

THIS DRAWING MAY NOT BE ALTERED IN ANYWAY WITHOUT THE WRITTEN CONSENT OF THE STAMPING ENGINEER

DRAWING COPYRIGHT ©

OWNER:
TOWN OF POMFRET
5218 POMFRET ROAD
NORTH POMFRET, VT 05053
(802) 457-3861

PROJECT:
POMFRET ROAD CULVERT #59

ISSUED FOR:
BID & CONSTRUCTION

ISSUED DATE:
2026-11-09

PROJ. #: 090-01

REVISIONS

#	BY:	DATE:

TITLE SHEET

DRAWING NO:
G-1.0

GENERAL/CONSTRUCTION NOTES

1. TO CLARIFY THE PLANS, ALL EXISTING SITE FEATURES ARE SHOWN IN lowercase LETTERS AND ALL PROPOSED IMPROVEMENTS ARE SHOWN IN CAPITAL LETTERS.
2. THIS PLAN SHOWS APPROXIMATE SITE FEATURES, UTILITIES, TAX MAP BOUNDARY LINES, BUILDINGS, AND OTHER SITE FEATURES BASED ON A SURVEY COMPLETED BY EAST ENGINEERING IN FEBRUARY 2023. ADDITIONAL DEPICTIONS ARE BASED ON INFORMATION FROM THE VERMONT GEODATA PORTAL, OWNER, AND UTILITY COMPANIES. THIS IS NOT A BOUNDARY SURVEY.
3. TECHNICAL SPECIFICATIONS ACCOMPANY THE PLANS AND ARE ESSENTIAL FOR CONSTRUCTION. UNLESS OTHERWISE NOTED, THE VERMONT AGENCY OF TRANSPORTATION (VTRANS) 2018 STANDARD SPECIFICATIONS FOR CONSTRUCTION SHALL BE FOLLOWED. CONTRACTOR FIELD PERSONNEL SHALL HAVE THE PLANS, SPECIFICATIONS, AND BID DOCUMENTS IN THE FIELD DURING CONSTRUCTION.
4. ALL SITE SAFETY, SECURITY, MEANS AND METHODS ARE THE RESPONSIBILITY OF THE CONTRACTOR. ALL OSHA/VOSHA RULES AND REGULATIONS SHALL BE ADHERED TO AT ALL TIMES. AT THE END OF EACH WORKING DAY, CONTRACTOR SHALL SECURE ALL EQUIPMENT, MATERIALS, AND FACILITIES. ALL OPEN EXCAVATIONS SHALL BE BARRICADED, FENCED, PLATED, COVERED OR TEMPORARILY BACKFILLED.
5. ALL APPLICABLE PERMITTING CONDITIONS AND REGULATIONS SHALL BE MAINTAINED BY THE CONTRACTOR.
6. NO WORK OUTSIDE OF THE TOWN RIGHT-OF-WAY, OR TOWN OBTAINED EASEMENTS, UNLESS WRITTEN PERMISSION FROM BOTH THE LANDOWNER AND ENGINEER ARE OBTAINED.
7. TRAFFIC SHALL BE DETOURED DURING THE ROAD CLOSURE. MAXIMUM ROAD CLOSURE SHALL BE 21 DAYS - ONE LANE DURING WORKING HOURS, TWO LANES AFTER WORKING HOURS MUST BE RESTORED AT THE END OF 21 DAYS.
8. ALL DISTURBED AREAS SHALL BE RESTORED TO PRE-CONSTRUCTION CONDITIONS OR BETTER.
9. THE PROJECT IS NOT REQUIRED TO OBTAINED COVERAGE UNDER THE STATE OF VERMONT, AGENCY OF NATURAL RESOURCES, DEPARTMENT OF ENVIRONMENTAL CONSERVATION, CONSTRUCTION GENERAL PERMIT (3-9020) FOR STORMWATER GENERATED FROM THE PROJECT. HOWEVER, BEST MANAGEMENT PRACTICES FOR EROSION PREVENTION AND SEDIMENT CONTROL SHALL BE MAINTAINED REGARDLESS.
10. DISTURBED AREAS NOT UNDER ACTIVE CONSTRUCTION SHALL BE STABILIZED WITHIN 7 DAYS.
11. IF TURBID WATER IS FOUND TO BE LEAVING THE PROJECT AREA, THE CONTRACTOR SHALL IMPLEMENT ADDITIONAL EROSION PREVENTION AND SEDIMENT CONTROL DEVICES TO LIMIT THE DISCHARGE. DISCHARGES SHALL BE REPORTED TO THE ENGINEER WITHIN 24 HOURS.
12. EXCAVATION DEWATERING SHALL BE DISCHARGED TO UPLAND AREAS INTO AN APPROVED EROSION PREVENTION DEVICE, UNLESS WATER IS CLEAR AND FREE OF TURBIDITY.
13. SLOPES STEEPER THAN 2:1 SHALL HAVE STONE ARMORING. SLOPES BETWEEN 2:1 AND 3:1 SHALL HAVE ROLLED EROSION MATTING. SLOPES LESS THAN 3:1 SHALL HAVE SEED AND MULCH.

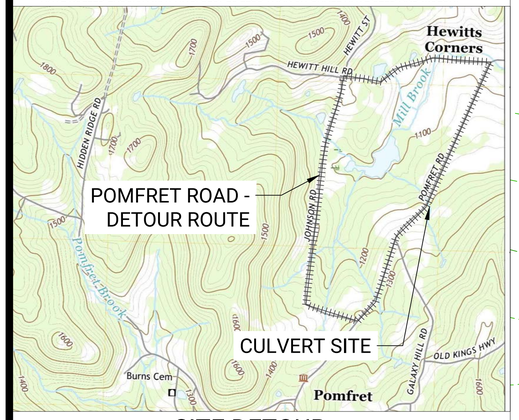

SITE DETOUR

NOT TO SCALE

EXISTING LEGEND :

- underground telecom (tel)
- overhead wires (ohw)
- utility pole
- fence/guardrail
- sign
- trees/vegetation
- road right-of-way / tax map
- elevation contour
- edge of water
- ACOE ohw
- town easement

PROPOSED LEGEND :

- DETOUR
- PROPOSED CONTOUR (454)
- STONE ARMORING
- CONCRETE
- CULVERT/BRIDGE
- SIGN/TYPE
- x 452.0' SPOT ELEVATION
- ACOE INCIDENTAL IMPACT
- ACOE TEMPORARY IMPACT
- ACOE PERMANENT IMPACT

ABBREVIATIONS:

HDPE	HIGH DENSITY POLYETHYLENE
CONC	CONCRETE
DI	DUCTILE IRON
PVC	POLYVINYL CHLORIDE
CMP	CORRUGATED METAL PIPE
VTRANS	VERMONT AGENCY OF TRANSPORTATION
MUTCD	MANUAL ON UN. TRAFFIC CONTROL DEVICES
TYP	TYPICAL
TEMP	TEMPORARY
MIN	MINIMUM
MAX	MAXIMUM
TBR	TO BE REMOVED
TBA	TO BE ABANDONED
APPROX	APPROXIMATE
EL	ELEVATION
ROW	RIGHT-OF-WAY
CTRL	CONTROL POINT
NTS	NOT TO SCALE
N/F	NOW OR FORMERLY

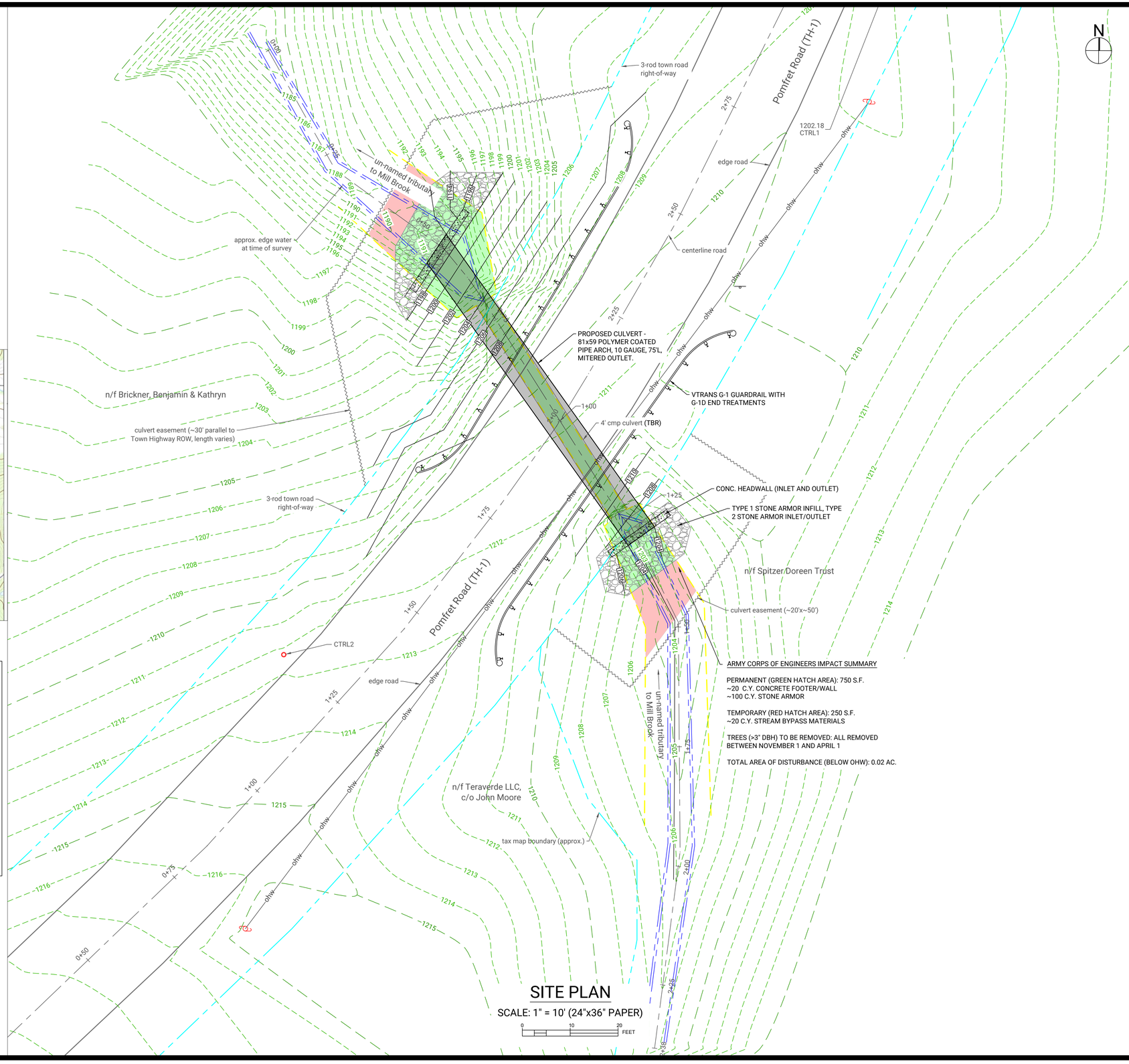

ARMY CORPS OF ENGINEERS IMPACT SUMMARY

PERMANENT (GREEN HATCH AREA): 750 S.F.
~20 C.Y. CONCRETE FOOTER/WALL
~100 C.Y. STONE ARMOR

TEMPORARY (RED HATCH AREA): 250 S.F.
~20 C.Y. STREAM BYPASS MATERIALS

TREES (>3" DBH) TO BE REMOVED: ALL REMOVED BETWEEN NOVEMBER 1 AND APRIL 1

TOTAL AREA OF DISTURBANCE (BELOW OHW): 0.02 AC.

SITE PLAN

SCALE: 1" = 10' (24"x36" PAPER)

0 10 20 FEET

EAST ENGINEERING
CIVIL INFRASTRUCTURE

(802) 989-6686
WWW.EASTENGINEERINGPLC.COM

STATE OF VERMONT — TYLER D. BILLINGSLEY — NO. 69581 — CIVIL — LICENSED PROFESSIONAL ENGINEER

THIS DRAWING MAY NOT BE ALTERED IN ANYWAY WITHOUT THE WRITTEN CONSENT OF THE STAMPING ENGINEER

DRAWING COPYRIGHT ©

OWNER:
TOWN OF POMFRET
5218 POMFRET ROAD
NORTH POMFRET, VT 05053
(802) 457-3861

PROJECT:
POMFRET ROAD CULVERT #59

ISSUED FOR:
BID & CONSTRUCTION

ISSUED DATE:
2026-11-09

PROJ. #: 090-01

REVISIONS

#	BY:	DATE:

POMFRET ROAD SITE PLAN

DRAWING NO:
C-1.0

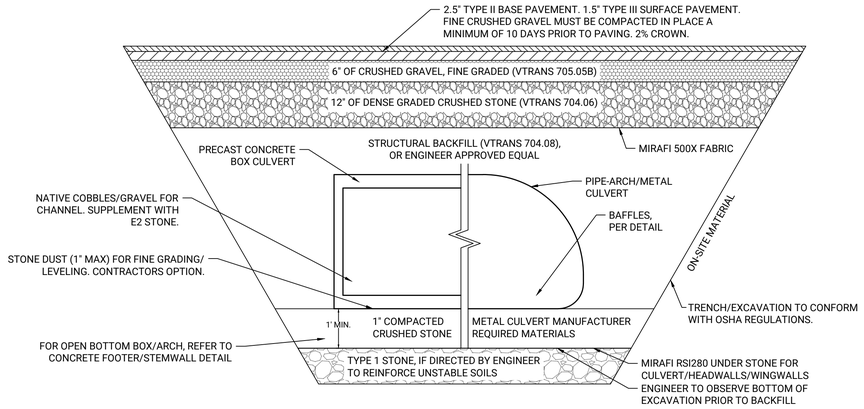

CULVERT/ROAD BACKFILL DETAIL

NOT TO SCALE

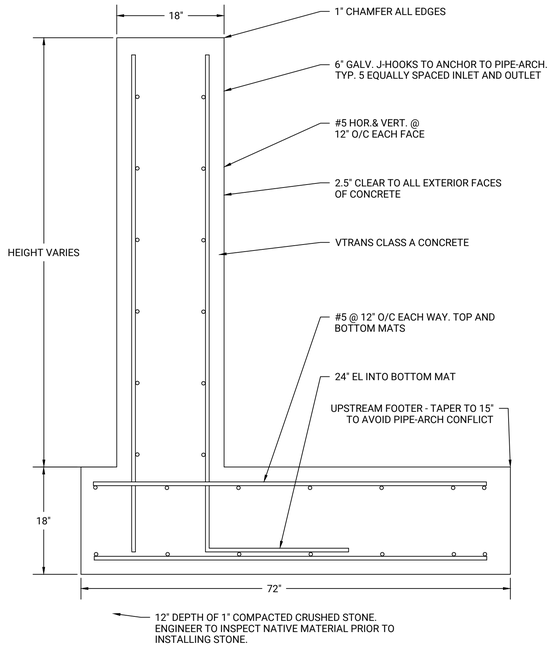

HEADWALL DETAIL

NOT TO SCALE

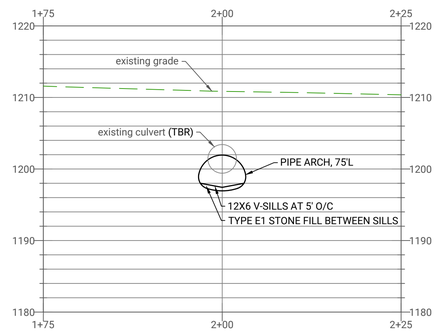

ROAD PROFILE & CULVERT SECTION

SCALE: 1" = 10' (24"x36" PAPER)

0 10 20 FEET

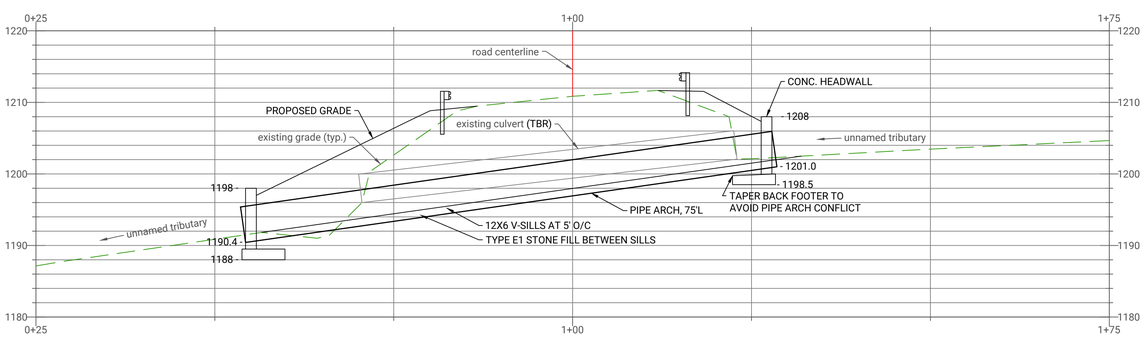

UN-NAMED TRIBUTARY PROFILE

SCALE: 1" = 10' (24"x36" PAPER)

0 10 20 FEET

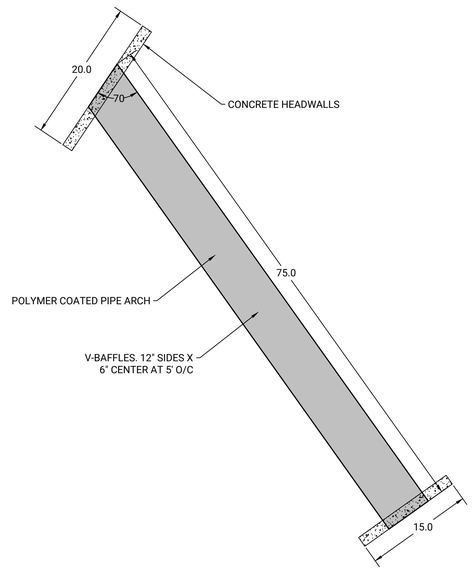

CULVERT DIMENSIONS/DETAIL

SCALE: 1" = 10' (24"x36" PAPER)

0 10 20 FEET

EAST ENGINEERING
CIVIL INFRASTRUCTURE

(802) 989-6686
WWW.EASTENGINEERINGPLC.COM

STATE OF VERMONT
TYLER D. BILLINGSLEY
NO. 69581
CIVIL
LICENSED
PROFESSIONAL ENGINEER

THIS DRAWING MAY NOT BE ALTERED IN ANYWAY WITHOUT THE WRITTEN CONSENT OF THE STAMPING ENGINEER

DRAWING COPYRIGHT ©

OWNER:
TOWN OF POMFRET
5218 POMFRET ROAD
NORTH POMFRET, VT 05053
(802) 457-3861

PROJECT:
POMFRET ROAD CULVERT #59

ISSUED FOR:
BID & CONSTRUCTION

ISSUED DATE:
2026-11-09

PROJ. #: 090-01

REVISIONS

#	BY:	DATE:

DETAILS

DRAWING NO:
C-1.1

Item 6C
FY 2028 Budget Discussion

available at

https://pomfretvt.us/index.php/boar/sel/budget/

1. Parties: This is a Grant Agreement between State of Vermont Department of, Agency of Transportation (hereinafter called "State"), and **Town of Pomfret**, a **U.S. Local Government**, with its principal place of business at **5218 Pomfret Road, Pomfret, Vermont 05053**, (hereinafter called "Subrecipient"). It is the Subrecipient's responsibility to contact the Vermont Department of Taxes to determine if, by law, the Subrecipient is required to have a Vermont Department of Taxes Business Account Number.

2. Subject Matter: The subject matter of this Grant Agreement is the 2026 Small Scale Local Highway Safety Improvement Program (HSIP) to improve safety on local roadways.

3. Award Details: Amounts, dates and other award details are as shown in the attached *Grant Agreement Part 1-Grant Award Detail*. A detailed scope of work covered by this award is described in Attachment A.

4. Amendment: No changes, modifications, or amendments to the terms and conditions of this Grant Agreement shall be effective unless reduced to writing, numbered, and signed by the duly authorized representative of the State and Subrecipient.

5. Cancellation: This Grant Agreement may be suspended or cancelled by either party by giving written notice at least thirty (30) days in advance.

6. Attachments: This Grant consists of **37** pages including the following attachments that are incorporated herein:

   Grant Agreement: Part 2 - Grant Agreement
   Grant Agreement: Part 1 - Grant Award Detail
   Attachment A: Scope of Work
   Attachment B: Payment Provisions
   Attachment C: Standard State Provisions for Contracts and Grants (revised February 13, 2026)
   Attachment D: N/A - Left Intentionally Blank
   Attachment E: Special Provisions
   Attachment F: DOT Standard Title VI Assurances and Non-Discrimination Provisions (DOT 1050.2A) - Assurance Appendix A and Assurance Appendix E
   Attachment G: Applicable Standards & Design Criteria dated August 31, 2023
   Attachment H: Personnel Requirements and Conditions

7. Order of Precedence: Any ambiguity, conflict or inconsistency in the Grant Documents shall be resolved according to the following order of precedence:

    1. Grant Agreement Part 1 and Part 2
    2. Attachment E - Special Provisions
    3. Attachment D - N/A - Left Intentionally Blank
    4. Attachment C - Standard State Provisions for Contracts and Grants
    5. Attachment A - Scope of Work
    6. Attachment B - Payment Provisions
    7. Attachment F - DOT Standard Title VI Assurances and Non-Discrimination Provisions (DOT 1050.2A) - Assurance Appendix A and Assurance Appendix E
    8. Attachment G: Applicable Standards & Design Criteria dated August 31, 2023
    9. Attachment H: Personnel Requirements and Conditions

By signing this Agreement, the Parties certify that they have read and understand the terms and conditions of this Grant Agreement and agree to comply with all applicable federal, state, and local laws, regulations, and requirements. Each Party further certifies that the individual signing this Agreement is duly authorized to execute it on behalf of the respective organization.

STATE OF VERMONT	SUBRECIPIENT:
AGENCY OF TRANSPORTATION	**Town of Pomfret**
Date: _____	Date: _____
Signature: _____	Signature: _____
Name: Joe Flynn	Name: _____
Title: Secretary of Transportation	Title: _____

STATE OF VERMONT GRANT AGREEMENT — Part 1-Grant Award Detail

SECTION I - GENERAL GRANT INFORMATION

Grant Agreement # GR2129

[1] **Grant #:** GR2129	[2] **Original** [X]	**Amendment #** [ ]
[3] **Grant Title:** 2026 Small Scale Local Highway Safety Improvement Program (HSIP)		
[4] **Amount Previously Awarded:** $0.00	[5] **Amount Awarded This Action:** $50,000.00	[6] **Total Award Amount:** $50,000.00
[7] **Award Start Date:** 07/01/2026	[8] **Award End Date:** 07/01/2028	[9] **Subrecipient Award:** YES [X] NO [ ]
[10] **Supplier #:** 0000040729	[11] **Grantee Name:** Town of Pomfret	
[12] **Grantee Address:** 5218 Pomfret Road		
[13] **City:** North Pomfret	[14] **State:** Vermont	[15] **Zip Code:** 05053
[16] **State Granting Agency:** Vermont Agency of Transportation		[17] **Business Unit:** 08100
[18] **Performance Measures:** YES [X] NO [ ]	[19] **Match/In-Kind:** $0.00	**Description:**

[20] *If this action is an amendment, the following is amended:*
Amount: [ ] **Funding Allocation:** [ ] **Performance Period:** [ ] **Scope of Work:** [ ] **Other:** [ ]

SECTION II - SUBRECIPIENT AWARD INFORMATION

[21] **Grantee Identifier [UEI] #:** ELLSZHMPBA76	[22] **Indirect Rate:** 0.00 % (Approved rate or current Federal de minimis)	[23] **FFATA:** YES [X] NO [ ]
[24] **Grantee Fiscal Year End Month** (MM format): 6		[25] **R&D:** YES [ ] NO [X]

[26] **UEI Registered Name** *(if different than VISION Supplier Name in Box 11)*:

SECTION III - FUNDING ALLOCATION

STATE FUNDS

Fund Type	[27] Awarded Previously	[28] Award This Action	[29] Cumulative Award	[30] Special & Other Fund Descriptions
General Fund	$0.00	$0.00	$0.00	
Special Fund	$0.00	$0.00	$0.00	
Global Commitment (non-subrecipient funds)	$0.00	$0.00	$0.00	
Other State Funds	$0.00	$0.00	$0.00	

FEDERAL FUNDS
(includes subrecipient Global Commitment funds)

[31] ALN#	[32] Program Title	[33] Awarded Previously	[34] Award This Action	[35] Cumulative Award	Required Federal Award Information: [36] FAIN	[37] Fed Award Date	[38] Total Federal Award
20.272	Federal Highway Administration	$0.00	$50,000.00	$50,000.00	693JJ22630000YS60VTH SIP017	10/01/2025	$900,000.00
[39] Federal Awarding Agency: Federal Highway Administration (FHWA)			**[40] Federal Award Project Descr:** YS30 - HIGHWAY SAFETY IMP PROG IIJA				
				$0.00			
Federal Awarding Agency:			**Federal Award Project Descr:**				
				$0.00			
Federal Awarding Agency:			**Federal Award Project Descr:**				
				$0.00			
Federal Awarding Agency:			**Federal Award Project Descr:**				
				$0.00			
Federal Awarding Agency:			**Federal Award Project Descr:**				
Total Awarded - All Funds		$0.00	$50,000.00	$50,000.00			

SECTION IV - CONTACT INFORMATION

[41] STATE GRANTING AGENCY	[42] GRANTEE
NAME: Jesse Devlin	**NAME:** Frank Rogers
TITLE: Safe System Manager - Senior Manager II	**TITLE:** Highway Foreman
PHONE: (802) 793-0182	**PHONE:** (802) 457-2767
EMAIL: jesse.devlin@vermont.gov	**EMAIL:** highway@pomfretvt.us

ATTACHMENT A
SCOPE OF WORK
November 14, 2025

This reimbursement grant agreement supports basic, low-cost safety improvements that can be installed without engineering plans.

1. **Project Location and Description.** The work to be completed shall be as described within the Subrecipients application and supporting documentation.

2. **These are the eligible items:**

   - Curve signage, including chevrons, delineators, and advance warning signs
   - Intersection signage such as stop signs, yield signs, and advance warning signs
   - Edge line striping
   - Stop bar and crosswalk pavement markings
   - Rumble strips
   - Replacement of damaged or deteriorated guardrail (no new installation)
   - Fixed object removal (such as removal of trees or ledge)

3. **Approved Products List**

   Items listed below must be from the approved product list. A copy is provided here for reference; however, the most current list can be reviewed here: https://vtrans.vermont.gov/highway/construct-material/test-cert/certification/approved-products-and-advanced-certifications

   Signs and delineators:

   - Flat sheet aluminum products made by:
   - Retroreflective sheeting
   - Sign Posts
   - Pavement Markings
   - Guardrail

4. **Countermeasure Guidance**

   ### Curve Signage

   The HSIP grant program may be used to improve curve signage (including replacing signs with poor retroreflectivity) and bring it in line with MUTCD recommendations. The appropriate signage depends on the curve radius and advisory speed.

Chevrons




Chevrons may be added along the outside of a turn or curve. They are recommended for longer, tighter, or higher speed curves. Their use must adhere to MUTCD Section 2C.09. Chevrons should be spaced as shown in MUTCD Table 2C-6:

Table 2C-6. Typical Spacing of Chevron Alignment Signs on Horizontal Curves

Advisory Speed	Curve Radius	Sign Spacing
15 mph or less	Less than 200 feet	40 feet
20 to 30 mph	200 to 400 feet	80 feet
35 to 45 mph	401 to 700 feet	120 feet
50 to 60 mph	701 to 1,250 feet	160 feet
More than 60 mph	More than 1,250 feet	200 feet

Delineators

For curves that would benefit from additional guidance devices but do not justify chevrons, retroreflective delineators are another option. The use of delineators is governed by MUTCD Chapter 3F.

Advance Warning Signs

Advance warning signs indicate to drivers when they should slow for a curve. Their use is based on the difference between speed limit and advisory speed. If a curve does not already have an advisory speed limit, this document explains how they are set. The graphic below shows the types of signs included in this treatment.



[Source: MUTCD Figure 2C-1]

The typical application is one or two warning signs per approach with chevrons and/or a large arrow sign along the curve. An example is MUTCD Figure 2C-2.

Sizes that should be used are listed in MUTCD Table C2-2.

Guidance on whether to use curve (W1-2), turn (W1-1), reverse turn (W1-3), reverse curve (W1-4), winding road (W1-5), or hairpin curve (W1-11) signs can be found in MUTCD Section 2C.07.

Recommended sign sizes are shown in MUTCD Table 2C-4.

MUTCD Table 2C-5, copied below, lists requirements for horizontal curves on arterial and collector roadways with daily traffic over 1,000. These standards can also be used to select sign packages for other local roads.

Figure 1 is an application of these signs on Vermont roads.



Figure 1. MUTCD Compliant Curve Warning Signs in Vermont.

Type of Horizontal Alignment Sign	Difference Between Speed Limit and Advisory Speed				
	5 mph	10 mph	15 mph	20 mph	25 mph or more
Turn (W1-1), Curve (W1-2), Reverse Turn (W1-3), Reverse Curve (W1-4), Winding Road (W1-5), and Combination Horizontal Alignment/Intersection (W1-10) (see Section 2C.07 to determine which sign to use)	Recommended	Required	Required	Required	Required
Advisory Speed Plaque (W13-1P)	Recommended	Required	Required	Required	Required
Chevrons (W1-8) and/or One Direction Large Arrow (W1-6)	Optional	Recommended	Required	Required	Required

Exit Speed (W13-2) and Ramp Speed (W13-3) on exit ramp	Optional	Optional	Recommended	Required	Required

Intersection Signage

Towns may request funding to upgrade intersection warning signs. These should be considered for intersection approaches with short distances, a history of crashes, or unusual geometries such as a high skew.

Sign enhancement options include:

- Doubled-up signage (included on both sides of the roadway – also known as “gate-posted”).
- Oversized signage.
- Reflective strips on signposts.
- Additional warning signs.
- “Stop Ahead” warning signs.
- Advanced yellow street name signs as supplemental plaques mounted below warning signs (see Figure 2).
- Replacement of signs with poor retro reflectivity.

These should be installed consistent with the MUTCD, including:

- Section 2C-36, Advance Traffic Control Signs
- Section 2C-46, Intersection Warning Signs
- Section 2C-47, Two-Direction Large Arrow Signs



Figure 2. Application of intersection signage in Vermont.

The following is a list of the isolated safety effects of several countermeasures included in this package:

- Advanced street name signs (meaning yellow supplemental street name signs installed below warning signs) reduce fatal and injury crashes by 1 percent, although this relates to signalized intersections (CMF ID 2450).
- Doubled-up Stop signs (installed on both sides of the roadway) reduce angle crashes by 55 percent, though the study is only rated 1-star on the CMF Clearinghouse (CMF ID 1661).
- Increased retroreflectivity of Stop signs reduce fatal and injury crashes by 9.4 percent (CMF ID 6052).

Flashing beacons reduce fatal and injury crashes by 10 percent at stop-controlled intersections (CMF ID 447).

Edge Line Markings on Paved Roads

Towns may request funding to add or enhance white edge line markings. Four-inch lines are standard, but for additional emphasis 6 or 8-inch lines may be painted. The MUTCD requires edge lines on rural arterials with a traveled way of 20’ or more and an average daily traffic of 6,000 vehicles or greater. They are recommended on roads with an average daily traffic over 3,000 or where additional delineation may reduce run-off-the-road crashes. Edge lines can be painted on roads with or without center line markings (see MUTCD Section 3B-07).

Edge lines should comply with MUTCD Section 3B-06:

Standard:

1. If used, edge line pavement markings shall delineate the right or left edges of a roadway.
2. Except for dotted edge line extensions (see Section 3B.08), edge line markings shall not be continued through intersections or major driveways.

3. If used on the roadways of divided highways or one-way streets, or on any ramp in the direction of travel, left edge line pavement markings shall consist of a normal solid yellow line to delineate the left-hand edge of a roadway or to indicate driving or passing restrictions left of these markings.
4. If used, right edge line pavement markings shall consist of a normal solid white line to delineate the right-hand edge of the roadway.

Guidance:

5. 05 Edge line markings should not be broken for minor driveways.

Option:

6. 07 Wide solid edge line markings may be used for greater emphasis.

Safety Effectiveness:

Edge lines reduce crashes by 15 percent for pavement widths as narrow as 20 ft, or even narrower if an engineering study illustrates there would be a safety benefit (CMF Clearinghouse ID 5646).

5. **Project Timeline.** From start to finish, a grant-funded project is a 12–24-month commitment. It is expected that construction of Small-Scale projects will be completed in the year following execution of the grant agreement.

6. **Specifications.** Current Vermont Agency of Transportation Standard Specifications for Construction book and current Special Provisions.

7. **Environmental and Right of Way Requirements.** Projects will be reviewed for their impact on archaeological, historic, and natural resources. Subrecipient certifies that they have all necessary rights to construct the project. Construction activities cannot begin until these are complete and a notice to proceed is provided to the Subrecipient by the Vermont Agency of Transportation.

8. **Environmental Commitments.** The development of environmental commitments will be a component of the grant's environmental review, draft environmental commitments are shown below and are included for Subrecipient planning purposes:

- Environmental and Right of Way Requirements:
    a. Vermont state statute (22VSA§14) requires that any undertaking with state funding be reviewed for its impact on archaeological or historic resources. Successful applicants must also provide photos of any environmental concerns, e.g. wetlands, river buffers or other natural resources impacted by the project. Project sponsors

must also attest that they have all necessary rights to construct the project. To see what is needed to satisfy the 22VSA§14 requirements, see https://tinyurl.com/22VSA-Guide

- Threatened, Endangered, and Rare Species:
    a. The Contractor shall ensure all personnel working on the project site are made aware of the potential presence and protected status of the northern long eared bat and Indiana Bat. The Contractor shall ensure all personnel working on the project site are aware of all environmental commitments related to the northern long eared bat and Indiana Bat.

    b. The clearing of trees ≥3 inches in diameter at breast height within the project limits shall be completed between November 1 and March 31, inclusive.

    c. The Contractor is hereby made aware of the potential for Time-of-Year (TOY) restrictions related to the proposed Waste, Borrow and Staging areas. Cutting trees ≥3 inches in diameter outside of the contract project limits shall require review under Section 105.26 Opening Off-Site Activity Areas.

- Environmental Commitments:
    a. Any tree cutting that is planned in areas where mapped wetlands overlap cutting area, or if done outside of time of year restrictions for listed bat species, must go through a separate NEPA approval by VTrans biologists or a consultant. Please contact the VTrans project manager/supervisor if tree cutting must extend outside of these dates or if cutting must be done in wetland areas. All phases and aspects of the project (e.g., temporary work areas, alignments) must be modified, to the extent practicable, to avoid tree removal in excess of what is required to implement the project safely. Tree removal must be limited to that specified in project plans and ensure that contractors understand clearing limits and how they are marked in the field (e.g., install bright colored flagging/fencing prior to any tree clearing to ensure contractors stay within clearing limits).

- Emerald Ash Borer:
    a. As of 2018, emerald ash borer (EAB), Agrilus planipennis, has been confirmed within Vermont's borders. To provide an assurance of compliance with state and federal EAB laws the contractor shall adhere to the following:
        1. Known EAB infestation areas are changing rapidly. Therefore the Contractor shall consult the online version of the EAB Infested Area Map (Located here: www.vtinvasives.org/land/emerald-ash-borervermont) on the same day cutting is to occur. If the project is located within an EAB infested area, ALL tree material, regardless of species, within the project area shall be handled in accordance with a document developed by the Vermont Department of Forests, Parks and Recreation and the Vermont

Agency of Agriculture titled “Recommendations to SLOW THE SPREAD of Emerald Ash Borer When Moving Ash from the Infested Area”, https://vtinvasives.org/sites/default/files/images/SLS/SlowSpreadWoodVT%20FINAL.pdf. Tree material shall not be moved out of state.

2. Alternatively, the Contractor may choose to hire a qualified professional (Arborist certified by the International Society of Arboriculture or Licensed Forester), at their own expense, to identify the presence of ash trees. Those identified ash trees would be subject to the above referenced recommendations, however other tree species would not.
3. The Contractor is also hereby made aware of the same potential restrictions as they relate to proposed Off-Site Activities (Waste, Borrow and Staging) areas under Section 105.25 Off-Site Activity Areas.

9. **Inspection:** Federal funding requires certification and inspection. Certain items must be from the VTrans Approved Product List. Approved product list can be located here: https://vtrans.vermont.gov/highway/construct-material/test-cert/certification/approved-products-and-advanced-certifications. Subrecipient will submit product information documenting compliance if applicable and will also be asked for photographs to verify completion.

10. **Subrecipient Assumption of Full Responsibility for the Project.** The Subrecipient assumes full and complete responsibility for all aspects relative to the development of the Project except for those items defined in this Grant Agreement for which the State retains responsibility.

11. **Commencement of Work.** Subrecipient shall not commence work on or incur expenses for the Project until receiving authorization to proceed from the State or upon execution of the Agreement, whichever occurs later.

12. **Municipal Project Manager (MPM).** All work for the Project will be performed by the Subrecipient or its duly authorized consultant in conformance with the latest update of the Municipal Assistance Bureau Guide document(s). The Subrecipient will designate a full-time employee, member of its legislative body, or other representative, as approved by the State to be the Municipal Project Manager (MPM) for the Project. The MPM will act on the authority granted by the Subrecipient.

13. **Federal Environmental Documentation: Duties of MPM.** As appropriate, the MPM will review the National Environmental Policy Act (NEPA) environmental document (Categorical Exclusion [CE], Environmental Assessment [EA], or Environmental Impact Statement [EIS]) prepared for/by the Subrecipient, and after ensuring that it is in order, will ensure that all environmental commitments are adhered to.

14. **Pre-Construction: Duties of MPM.**, the MPM will:

    (a) The State will issue the Right-of-Way Clearance Certificate.

    (b) Review the utility and/or railroad issues for the Project and ensure compliance with all applicable federal and state laws and regulations. The State will provide Utility & Railroad Clearance.

    (c) Review the Project for compliance with all federal, state, and local laws, ordinances, regulations, and permit requirements.

    (d) Review and sign all project-related invoices and ensure invoices are in the proper format before submittal to the State for approval.

15. **Public Meeting.** The Subrecipient will warn a public meeting on the Project if required by the State to do so, conduct the meeting in accordance with state and federal requirements, and coordinate the Project with the State and property owners in the Project area.

16. **Project Construction.** The Subrecipient will be fully responsible for administration of the contract through completion and acceptance of the Project.

17. **Construction Engineering.** Construction inspection and materials sampling/testing work for the Project shall include inspection of the construction in progress for conformance with the contract requirements.

18. **Project Accounting.** The subrecipient will establish and maintain a separate accounting for Project funds, payments, and receipts for the duration of this Grant Agreement.

19. **Compliance with FHWA/USDOT Regulations.** Subrecipient agrees that it will manage the Project to comply with all applicable provisions of Titles 23 (Highways) and 49 (Transportation) of the Code of Federal Regulations (C.F.R.).

20. **Compliance with Federal, State and Local Requirements.** The subrecipient will comply with the requirements of all federal, state, and local laws, ordinances, and regulations applicable to the Project.

21. **Compliance with Permits, Agreements and Clearances.** Subrecipient will secure and honor all applicable and necessary local, state, and federal permits, agreements, and clearances prior to completion of final construction plans, and will adhere to or make provision for attainment of all conditions set forth in those documents.

22. **Expeditious Pursuit of Project.** Subrecipient will pursue the Project in an expeditious manner in conformance with the Project schedule agreed upon by the Subrecipient and the State. Changes found necessary by either party to this Grant Agreement or to the schedule for the Project will be brought to the attention of the other party as soon as possible so that mutual agreement can be achieved.

23. **Submission of "As-Built" Plans to the STATE.** For any Project affecting State highway rights-of-way, and for all structure-related projects, the Subrecipient will develop the plans in a format acceptable to the State and provide the State with four sets of "as-built" plans and one copy of any electronically developed plan files.

24. **Hazardous Material Contamination.** Responsibility for any contaminated materials within the Project area shall remain unaffected by this Grant Agreement as they are generally non-participating. The Subrecipient shall notify the State of the presence of and design alternatives for potential contaminated and/or hazardous waste sites located during the development or construction stage. Once the Subrecipient determines that contamination exists, whether obvious or established through testing, the Subrecipient shall notify the appropriate regulatory agency.

25. **Maintenance of the Completed Project.** If the Project is constructed, the Subrecipient will maintain the completed Project in a manner satisfactory to the State or its authorized representative(s) at no cost to the State and will make ample provisions each year for such maintenance.

26. **Personnel Requirements.** The Subrecipient will comply with the personnel requirements contained in Attachment G (Personnel Requirements and Conditions).

27. **Assignment of State Representative.** The State will assign a representative to act as its Project liaison with the Subrecipient.

28. **Conformance with Standards.** The parties agree that all work performed by the Subrecipient, or its duly authorized representative, shall conform to the applicable standards/design criteria set forth in Attachment F (Applicable Standards & Design Criteria), unless waived in whole or in part in writing by the State.

29. **Reviews by the State.** The parties agree that, at the discretion of the State's Program Director, the State may inspect or review any work or aspect of the Project for any reason during the development of the Project.

ATTACHMENT B
PAYMENT PROVISIONS

1. **Reimbursement:** The State agrees to reimburse the Subrecipient for actual expenses incurred or services provided by the Subrecipient in the performance of program functions outlined in the grant up to the total award amount stated on the Part 1 – Grant Award Detail, provided such services are within the scope of the grant agreement and are authorized as provided for under the terms and conditions of this grant agreement. Award of a grant agreement does not guarantee payment of any or all the total award amount stated on the Part 1 – Grant Award Detail.

2. **Remit Information:** The Subrecipient is responsible for providing the most current remit to information to the Agency of Transportation. If any information changes, please contact Business Support Services at the following e-mail to provide revised information: AOT.BusinessSupportServices@vermont.gov.

3. **Invoices:** Subrecipient shall submit detailed invoices itemizing all work performed during the invoice period, including the dates of service, rates of pay, hours of work performed, and any other information and/or documentation appropriate and sufficient to substantiate the amount invoiced for payment by the State. All invoices must include the grant agreement number for this agreement, a unique invoice number and follow a consistent numbering process. Invoices submitted without a unique invoice number will be returned.

   Invoices shall be submitted to the contact listed on the Part 1 – Grant Award Detail in Section IV, State Granting Agency.

4. **Force Account:** Bid or self-performed work (Force Account) and Contracting Services will be reimbursed at cost for time and materials.

   a) The projects or elements of a project that are not constructed via force account (work performed with local forces in-house) must follow procurement procedures as outlined in Bulletin 3.5, Part 9, for contracted services. The most recent version of the Form FHWA-1273, “Required Contract Provisions for Federal-aid Construction Contracts” must be physically incorporated into each contract.

5. **Non-Eligible Expense:**

   a) Engineering or Right of Way (ROW) acquisition are not eligible expenses.

   b) This funding may not be used to provide match to a federally funded project or to add to a federally funded project. These projects must be small stand-alone improvements. Awards will be for construction only.

6. **Non-Participating Costs.** Work accomplished by the Subrecipient, and/or its consultant or contractor, which has been designated by the State as non-participating for purpose of financial reimbursement, shall be the sole responsibility of the Subrecipient. Examples of non-participating costs include elements outside the scope of work, utility work not related to the project scope, any work outside of the Project limits and approaches and that portion of right-of-way settlements which exceed “Fair Market Value”, as determined by reviewing appraiser in accordance with 49 C.F.R. § 24.104 (Review of appraisals). Due to federal regulations that require all project costs to be reported within the federal financial system, the Subrecipient shall document and supply a summary of all non-participating costs. This shall include costs incurred by the Subrecipient above the maximum limiting amount of this Agreement.

7. **Compliance with Vermont Prompt Payment Act.** To the extent it is applicable, Subrecipient, with respect to work performed pursuant to this Grant Agreement, agrees to comply with the provisions of the Vermont Prompt Payment Act (9 V.S.A. Chapter 102).

8. **Reimbursement if Project Not Constructed due to Subrecipient.** If at any time the Subrecipient no longer desires the improvements as specified for the Project, or if the Subrecipient fails to meet its obligation to construct the Project, then the Subrecipient shall promptly notify the State. As provided by 19 V.S.A. § 309c(a), the State shall consult with the Subrecipient about the Subrecipient’s obligation to repay project costs. The Secretary of Transportation shall then make the final determination of the amount and schedule for the repayment that shall be made to the State by the Subrecipient, considering applicable laws and regulations. Pursuant to 19 V.S.A. §§ 5(d)(13) and 309c(b), within 15 days of the Secretary’s determination, the Subrecipient may petition the Vermont Transportation Board for a hearing to determine whether the amount of the Subrecipient’s repayment obligation as determined by the Secretary may be reduced.

9. **Payment of Amounts Found Due to Audit.** In the event an audit or inspection by a certified or registered public accountant or an authorized agent of the State reveals that monies are due and owing to the State from the Subrecipient, for whatever reasons, then the Subrecipient shall pay such sums to the State within thirty (30) days of written notification of the findings of such audit or inspection.

Attachment C: Standard State Provisions for Contracts and Grants

Revised: February 13, 2026

1. **Definitions:** For purposes of this Attachment, "Party" shall mean the Contractor, Grantee, or Subrecipient, with whom the State of Vermont is executing this Agreement and consistent with the form of the Agreement. "Agreement" shall mean the specific contract or grant to which this form is attached.
2. **Entire Agreement:** This Agreement, whether in the form of a contract, State-funded grant, or Federally-funded grant, represents the entire agreement between the parties on the subject matter. All prior agreements, representations, statements, negotiations, and understandings shall have no effect. Where an authorized individual is either required to click-through or otherwise accept, or made subject to, any electronic terms and conditions to use or access any product or service provided hereunder, such terms and conditions are not binding and shall have no force or effect. Further, any terms and conditions of Party's invoice, acknowledgment, confirmation, or similar document, shall not apply, and any such terms and conditions on any such document are objected to without need of further notice or objection.
3. **Governing Law, Jurisdiction and Venue; No Waiver of Jury Trial:** This Agreement will be governed by the laws of the State of Vermont without resort to conflict of laws principles. Any action or proceeding brought by either the State or the Party in connection with this Agreement shall be brought and enforced in the Superior Court of the State of Vermont, Civil Division, Washington Unit. The Party irrevocably submits to the jurisdiction of this court for any action or proceeding regarding this Agreement. The Party agrees that it must first exhaust any applicable administrative remedies with respect to any cause of action that it may have against the State regarding its performance under this Agreement. Party agrees that the State shall not be required to submit to binding arbitration or waive its right to a jury trial.
4. **Sovereign Immunity:** The State reserves all immunities, defenses, rights, or actions arising out of the State's sovereign status or under the Eleventh Amendment to the United States Constitution. No waiver of the State's immunities, defenses, rights, or actions shall be implied or otherwise deemed to exist by reason of the State's entry into this Agreement.
5. **No Employee Benefits For Party:** The Party understands that the State will not provide any individual retirement benefits, group life insurance, group health and dental insurance, vacation or sick leave, workers compensation or other benefits or services available to State employees, nor will the State withhold any state or Federal taxes except as required under applicable tax laws, which shall be determined in advance of execution of the Agreement. The Party understands

that all tax returns required by the Internal Revenue Code and the State of Vermont, including but not limited to income, withholding, sales and use, and rooms and meals, must be filed by the Party, and information as to Agreement income will be provided by the State of Vermont to the Internal Revenue Service and the Vermont Department of Taxes.

6. **Independence:** The Party will act in an independent capacity and not as officers or employees of the State.
7. **Defense and Indemnity:**
   A. The Party shall defend the State and its officers and employees against all third-party claims or suits arising in whole or in part from any act or omission of the Party or of any agent of the Party in connection with the performance of this Agreement. The State shall notify the Party in the event of any such claim or suit, and the Party shall immediately retain counsel and otherwise provide a complete defense against the entire claim or suit. The State retains the right to participate at its own expense in the defense of any claim. The State shall have the right to approve all proposed settlements of such claims or suits.
   B. After a final judgment or settlement, the Party may request recoupment of specific defense costs and may file suit in Washington Superior Court requesting recoupment. The Party shall be entitled to recoup costs only upon a showing that such costs were entirely unrelated to the defense of any claim arising from an act or omission of the Party in connection with the performance of this Agreement.
   C. The Party shall indemnify the State and its officers and employees if the State, its officers, or employees become legally obligated to pay any damages or losses arising from any act or omission of the Party or an agent of the Party in connection with the performance of this Agreement.
   D. Notwithstanding any contrary language anywhere, in no event shall the terms of this Agreement or any document furnished by the Party in connection with its performance under this Agreement obligate the State to (1) defend or indemnify the Party or any third party, or (2) otherwise be liable for the expenses or reimbursement, including attorneys' fees, collection costs or other costs of the Party or any third party.
8. **Insurance:** During the term of this Agreement, Party, at its expense, shall maintain in full force and effect the insurance coverages set forth in the Vermont State Insurance Specification in effect at the time of incorporation of this Attachment C into this Agreement. The terms of the Vermont State Insurance Specification are hereby incorporated by reference into this Attachment C as if fully set forth herein. A copy of the Vermont State Insurance Specification is available at: https://aoa.vermont.gov/Risk-Claims-COI.
9. **Reliance by the State on Representations:** All payments by the State under this Agreement will be made in reliance upon the accuracy of all representations

made by the Party in accordance with this Agreement, including but not limited to bills, invoices, progress reports, and other proofs of work.

10. **False Claims Act:** Any liability to the State under the Vermont False Claims Act (32 V.S.A. § 630 et seq.) shall not be limited notwithstanding any agreement of the State to otherwise limit Party's liability.

11. **Whistleblower Protections:** The Party shall not discriminate or retaliate against one of its employees or agents for disclosing information concerning a violation of law, fraud, waste, abuse of authority, or acts threatening health or safety, including but not limited to allegations concerning the False Claims Act. Further, the Party shall not require such employees or agents to forego monetary awards as a result of such disclosures, nor should they be required to report misconduct to the Party or its agents prior to reporting to any governmental entity and/or the public.

12. **Use and Protection of State Information:**

    A. As between the State and Party, "State Data" includes all data received, obtained, or generated by the Party in connection with performance under this Agreement. Party acknowledges that certain State Data to which the Party may have access may contain information that is deemed confidential by the State, or which is otherwise confidential by law, rule, or practice, or otherwise exempt from disclosure under the State of Vermont Access to Public Records Act, 1 V.S.A. § 315 et seq. ("Confidential State Data").

    B. With respect to State Data, Party shall:

        i. take reasonable precautions for its protection;

        ii. not rent, sell, publish, share, or otherwise appropriate it; and

        iii. upon termination of this Agreement for any reason, Party shall dispose of or retain State Data if and to the extent required by this Agreement, law, or regulation, or otherwise requested in writing by the State.

    C. With respect to Confidential State Data, Party shall:

        i. strictly maintain its confidentiality;

        ii. not collect, access, use, or disclose it except as necessary to provide services to the State under this Agreement;

        iii. provide at a minimum the same care to avoid disclosure or unauthorized use as it provides to protect its own similar confidential and proprietary information;

        iv. implement and maintain administrative, technical, and physical safeguards and controls to protect against any anticipated threats or hazards or unauthorized access or use;

        v. promptly notify the State of any request or demand by any court, governmental agency or other person asserting a demand or

request for Confidential State Data so that the State may seek an appropriate protective order; and

vi. upon termination of this Agreement for any reason, and except as necessary to comply with subsection B.iii above in this section, return or destroy all Confidential State Data remaining in its possession or control.

D. If Party is provided or accesses, creates, collects, processes, receives, stores, or transmits Confidential State Data in any electronic form or media, Party shall utilize:

i. industry-standard firewall protection;

ii. multi-factor authentication controls;

iii. encryption of electronic Confidential State Data while in transit and at rest;

iv. measures to ensure that the State Data shall not be altered without the prior written consent of the State;

v. measures to protect against destruction, loss, or damage of State Data due to potential environmental hazards, such as fire and water damage;

vi. training to implement the information security measures; and

vii. monitoring of the security of any portions of the Party's systems that are used in the provision of the services against intrusion.

E. No Confidential State Data received, obtained, or generated by the Party in connection with performance under this Agreement shall be processed, transmitted, stored, or transferred by any means outside the United States, except with the express written permission of the State.

F. Party shall notify the State within twenty-four hours after becoming aware of any unauthorized destruction, loss, alteration, disclosure of, or access to, any State Data.

G. State of Vermont Cybersecurity Standard Update: Party confirms that all products and services provided to or for the use of the State under this Agreement shall be in compliance with State of Vermont Cybersecurity Standard Update in effect at the time of incorporation of this Attachment C into this Agreement. The State of Vermont Cybersecurity Standard Update prohibits the use of certain branded products in State information systems or any vendor system, and a copy is available at: https://digitalservices.vermont.gov/cybersecurity/cybersecurity-standards-and-directives.

H. In addition to the requirements of this Section 12, Party shall comply with any additional requirements regarding the protection of data that may be included in this Agreement or required by law or regulation.

13. **Records Available for Audit:** The Party shall maintain all records pertaining to performance under this Agreement. "Records" means any written or recorded information, regardless of physical form or characteristics, which is produced or acquired by the Party in the performance of this Agreement. Records produced or acquired in a machine-readable electronic format shall be maintained in that format. The records described shall be made available at reasonable times during the period of this Agreement and for three years thereafter or for any period required by law for inspection by any authorized representatives of the State or Federal Government. If any litigation, claim, or audit is started before the expiration of the three-year period, the records shall be retained until all litigation, claims, or audit findings involving the records have been resolved.

14. **Nondiscrimination:**

A. **Fair Employment Practices and Americans with Disabilities Act:** Party agrees to comply with the requirement of 21 V.S.A. Chapter 5, Subchapter 6, relating to fair employment practices, to the full extent applicable, and shall include this provision in all subcontracts for work performed in Vermont. Party shall also ensure, to the full extent required by the Americans with Disabilities Act of 1990, as amended, that qualified individuals with disabilities receive equitable access to the services, programs, and activities provided by the Party under this Agreement.

B. **IT Accessibility Standards:** Party acknowledges and agrees that any digital products, services, and content provided under this Agreement, whether supporting State programs or intended for the State's use, must adhere to the State's accessibility standards and guidelines as established by Section 504 of the Rehabilitation Act of 1973 and Title II of the Americans with Disabilities Act of 1990 (28 CFR Part 35) (hereinafter, for purposes of this subsection B, the "Rule"). The Rule requires communication and content on web platforms and mobile applications to meet or exceed specific success criteria and conformance requirements. The Rule applies to websites, software applications, electronic reports and output documentation, and training delivered in electronic formats (including, but not limited to, documents, videos, and webinars), and other digital content. Information concerning the Rule and the State's Universal Digital Accessibility resources are available on the State's Communications and Marketing Office website at: https://cmo.vermont.gov.

i. Party warrants that the software, products, services, or subscriptions provided under this Agreement, whether supporting State programs or intended for the State's use (hereinafter, for purposes of this subsection B, "Products") comply with the Rule and agrees to defend, indemnify, and hold harmless the State against any claims related to a Product's non-compliance with the Rule.

ii. When updates or upgrades are made to the Products available through this Agreement, the Party agrees:

a) to develop functionality that supports accessibility in conformance with the Rule and, if any issues arise due to nonconformance with the Rule, to provide alternative solutions upon request at no additional cost to the State; and

b) to document how the changes will impact or improve the Product's accessibility and usability. This documentation, upon request, must be provided to the State in advance of the update or upgrade, occurring within an agreed timeframe sufficient for the State to review the changes and either approve them or request a remediation plan from the Party.

iii. If agreed-upon updates fail to improve the Product's accessibility or usability as planned, such failure shall be a material breach of this Agreement.

15. **Offset:** The State may offset any sums which the Party owes the State against any sums due the Party under this Agreement; provided, however, that any offset of amounts due the State of Vermont as taxes shall be in accordance with the procedures more specifically provided in 32 V.S.A. § 3113.

16. **Taxes Due to the State:** Party certifies under the pains and penalties of perjury that, as of the date this Agreement is signed, the Party is in good standing with respect to, or in full compliance with, a plan to pay any and all taxes due the State of Vermont.

17. **Taxation of Purchases:** All State purchases must be invoiced tax free. An exemption certificate will be furnished upon request with respect to otherwise taxable items.

18. **Child Support:** (Only applicable if the Party is a natural person, not a corporation or partnership.) Party states that, as of the date this Agreement is signed, Party is not under an obligation to pay child support or is in good standing with respect to or in full compliance with a plan to pay any and all child support payable under a support order. Party makes this statement with regard to support owed to any and all children residing in Vermont. In addition, if the Party is a resident of Vermont, Party makes this statement with regard to support owed to any and all children residing in any other state or territory of the United States.

19. Sub-Agreements: Party shall not assign, subcontract, or subgrant the performance of this Agreement or any portion thereof to any other Party without the prior written approval of the State. Party shall be responsible and liable to the State for all acts or omissions of subcontractors and any other person performing work under this Agreement pursuant to an agreement with Party or any subcontractor.

    In the case this Agreement is a contract with a total cost in excess of $250,000, the Party shall provide to the State a list of all proposed subcontractors and subcontractors' subcontractors, together with the identity of those subcontractors' workers compensation insurance providers, and additional required or requested information, as applicable, in accordance with Section 32 of The Vermont

Recovery and Reinvestment Act of 2009 (Act No. 54), as amended by Section 17 of Act No. 142 (2010) and by Section 6 of Act No. 50 (2011).

Party shall include the following provisions of this Attachment C in all subcontracts for work performed solely for the State of Vermont and subcontracts for work performed in the State of Vermont: Section 10 ("False Claims Act"); Section 11 ("Whistleblower Protections"); Section 12 ("Confidentiality and Protection of State Information"); Section 14 ("Fair Employment Practices and Americans with Disabilities Act"); Section 16 ("Taxes Due the State"); Section 18 ("Child Support"); Section 20 ("No Gifts or Gratuities"); Section 22 ("Certification Regarding Debarment"); Section 30 ("State Facilities"); and Section 32.A ("Certification Regarding Use of State Funds").

20. **No Gifts or Gratuities:** Party shall not give title or possession of anything of substantial value (including property, currency, travel, and/or education programs) to any officer or employee of the State during the term of this Agreement.
21. **Regulation of Hydrofluorocarbons:** Party confirms that all products provided to or for the use of the State under this Agreement shall not contain hydrofluorocarbons, as prohibited under 10 V.S.A. § 586.
22. **Certification Regarding Debarment:** Party certifies under pains and penalties of perjury that, as of the date that this Agreement is signed, neither Party nor Party's principals (officers, directors, owners, or partners) are presently debarred, suspended, proposed for debarment, declared ineligible, or excluded from participation in Federal programs, or programs supported in whole or in part by Federal funds. Party further certifies under pains and penalties of perjury that, as of the date that this Agreement is signed, Party is not presently debarred, suspended, nor named on the State's Debarment List at: https://bgs.vermont.gov/purchasing-contracting/debarment.
23. **Conflict of Interest:**
    A. **Organizational Conflict of Interest (OCOI):** An OCOI arises when the Party as a business entity has an interest (for example, customers, partners, contracts) that could undermine, or reasonably be perceived to undermine, its faithful and unbiased performance of this Agreement.
    B. **Personal Conflict of Interest (PCOI):** A PCOI arises when an interest held by an agent or employee of the Party could undermine, or reasonably be perceived to undermine, the faithful and unbiased performance of this Agreement.
    C. **Requirements:** Party shall not have PCOIs or OCOI's with respect to this Agreement nor with respect to any other agreement(s) it may hold with the State. To ensure that PCOIs and OCOIs do not exist, the Party shall:
        i. Conduct an internal review of its current affiliations and activities and employees and agents and identify actual, potential, or reasonably perceived PCOIs or OCOIs relative to this Agreement.

ii. Maintain effective oversight to verify compliance with PCOI and OCOI prohibitions.

iii. Prevent PCOIs, including not assigning or allowing an employee to perform any role or task under this Agreement for which the Party has identified a PCOI.

iv. Inform employees and agents of their obligation to disclose PCOIs and to comply with the confidentiality provisions and any non-disclosure agreement required by this Agreement.

v. Make an immediate and full disclosure, in writing, to the State point of contact for this Agreement of any actual or potential PCOI or OCOI or the existence of any facts that may cause a reasonably prudent person to perceive a PCOI or OCOI with respect to this Agreement.

D. **Remedies:**

i. In the event the State determines that a PCOI or OCOI exists, the State will discuss the matter with the Party to determine whether the PCOI or OCOI can be mitigated to the State's satisfaction.

ii. If the State does not deem mitigation practicable, the State may terminate all or a portion of this Agreement for default or pursue such other remedies as may be permitted by law or this Agreement.

iii. If Party fails to disclose facts pertaining to the existence of a potential or actual PCOI or misrepresents relevant information to the State, the State may terminate this Agreement for default or pursue such other remedies as may be permitted by law or this Agreement.

24. **Vermont Public Records Act:** Party acknowledges and agrees that this Agreement, any and all information obtained by the State from the Party in connection with this Agreement, and any obligations of the State to maintain the confidentiality of information are subject to the State of Vermont Access to Public Records Act, 1 V.S.A. § 315 et seq.

25. **Force Majeure:** Neither the State nor the Party shall be liable to the other for any failure or delay of performance of any obligations under this Agreement to the extent such failure or delay shall have been wholly or principally caused by acts or events beyond its reasonable control rendering performance illegal or impossible (excluding strikes or lockouts) ("Force Majeure"). Where Force Majeure is asserted, the nonperforming party must prove that it made all reasonable efforts to remove, eliminate or minimize such cause of delay or damages, diligently pursued performance of its obligations under this Agreement, substantially fulfilled all non-excused obligations, and timely notified the other party of the likelihood or actual occurrence of an event described in this paragraph.

26. **Marketing:** Party shall not use the State's logo or otherwise refer to the State in any publicity materials, information pamphlets, press releases, research reports,

advertising, sales promotions, trade shows, or marketing materials or similar communications to third parties except with the prior written consent of the State.

27. **Termination:**
    A. **Non-Appropriation:** If this Agreement extends into more than one fiscal year of the State (July 1 to June 30), and if appropriations are insufficient to support this Agreement, the State may cancel this Agreement at the end of the fiscal year, or otherwise upon the expiration of existing appropriation authority. In the case that this Agreement is funded in whole or in part by Federal funds, and in the event Federal funds become unavailable or reduced, the State may suspend or cancel this Agreement immediately, and the State shall have no obligation to pay Party from State revenues.
    B. **Termination for Cause:** Either party may terminate this Agreement if a party materially breaches its obligations under this Agreement, and such breach is not cured within thirty (30) days after delivery of the non-breaching party's notice or such longer time as the non-breaching party may specify in the notice.
    C. **Termination Assistance:** Upon nearing the end of the final term or termination of this Agreement, without respect to cause, the Party shall take all reasonable and prudent measures to facilitate any transition required by the State. All State property, tangible and intangible, shall be returned to the State upon demand at no additional cost to the State in a format acceptable to the State.
28. **Continuity of Performance:** In the event of a dispute between the Party and the State, each party will continue to perform its obligations under this Agreement during the resolution of the dispute until this Agreement is terminated in accordance with its terms.
29. **No Implied Waiver of Remedies:** Either party's delay or failure to exercise any right, power, or remedy under this Agreement shall not impair any such right, power, or remedy, or be construed as a waiver of any such right, power, or remedy. All waivers must be in writing.
30. **State Facilities:** If the State makes space available to the Party in any State facility during the term of this Agreement for purposes of the Party's performance under this Agreement, the Party shall only use the space in accordance with all policies and procedures governing access to, and use of, State facilities, which shall be made available upon request. State facilities will be made available to Party on an "AS IS, WHERE IS" basis, with no warranties whatsoever.
31. **Requirements Pertaining Only to Federal Grants and Subrecipient Agreements:** If this Agreement is a grant that is funded in whole or in part by Federal funds:
    A. **Requirement to Have a Single Audit:** The Subrecipient will complete the Subrecipient Annual Report annually within 45 days after its fiscal year end, informing the State of Vermont whether or not a Single Audit is required for

the prior fiscal year. If a Single Audit is required, the Subrecipient will submit a copy of the audit report to the Federal Audit Clearinghouse within nine months. If a single audit is not required, only the Subrecipient Annual Report is required. A Single Audit is required if the subrecipient expends $1,000,000 or more in Federal assistance during its fiscal year and must be conducted in accordance with 2 CFR Chapter I, Chapter II, Part 200, Subpart F. The Subrecipient Annual Report is required to be submitted within 45 days, whether or not a Single Audit is required.

B. **Internal Controls:** In accordance with 2 CFR Part II, §200.303, the Party must establish and maintain effective internal control over the Federal award to provide reasonable assurance that the Party is managing the Federal award in compliance with Federal statutes, regulations, and the terms and conditions of the award. These internal controls should be in compliance with guidance in "Standards for Internal Control in the Federal Government" issued by the Comptroller General of the United States and the "Internal Control Integrated Framework" issued by the Committee of Sponsoring Organizations of the Treadway Commission.

C. **Mandatory Disclosures:** In accordance with 2 CFR Part II, §200.113, Party must disclose, in a timely manner, in writing to the State, all violations of Federal criminal law involving fraud, bribery, or gratuity violations potentially affecting the Federal award. Failure to make required disclosures may result in the imposition of sanctions which may include disallowance of costs incurred, withholding of payments, termination of the Agreement, suspension/debarment, etc.

32. Requirements Pertaining Only to State-Funded Grants:

A. **Certification Regarding Use of State Funds:** If Party is an employer and this Agreement is a State-funded grant in excess of $1,000, Party certifies that none of these State funds will be used to interfere with or restrain the exercise of Party's employee's rights with respect to unionization.

B. **Good Standing Certification (Act 154 of 2016):** If this Agreement is a State-funded grant, Party hereby represents: (i) that it has signed and provided to the State the form prescribed by the Secretary of Administration for purposes of certifying that it is in good standing (as provided in Section 13(a)(2) of Act 154) with the Agency of Natural Resources and the Agency of Agriculture, Food and Markets, or otherwise explaining the circumstances surrounding the inability to so certify; and (ii) that it will comply with the requirements stated therein.

(End of Standard State Provisions)

ATTACHMENT E
SPECIAL PROVISIONS

1. **Cost of Materials:** Subrecipient will not buy materials and resell to the State at a profit.

2. **Availability of Federal Funds:** This contract is funded in whole or in part by federal funds. In the event the federal funds supporting this contract become unavailable or are reduced, the State may cancel this contract immediately, and the State shall have no obligation to pay Subrecipient from State revenues.

3. **Prior Approval/Review of Releases:** Any notices, information pamphlets, press releases, research reports, or similar other publications prepared and released in written or oral form by the Subrecipient under this grant agreement shall be approved/reviewed by the State prior to release.

4. **Subrecipient's Liens:** Subrecipient will discharge all contractors' or mechanics' liens imposed on property of the State through the actions of subcontractors.

5. **Federal-Aid Construction Work:** The subrecipient will comply with the provisions of the Davis-Bacon Act (40 U.S.C. §§ 276a to 276a 7), the Copeland Act (40 U.S.C. § 276c and 18 U.S.C. § 874), and the Contract Work Hours and Safety Standards Act (40 U.S.C. §§ 327-333), regarding labor standards for federally assisted construction sub agreements.

6. **Equal Opportunity Plan:** If they are required by the Federal Office of Civil Rights to have a plan, the subrecipient must provide a copy of the approval of their Equal Opportunity Plan.

7. **Supplanting:** If required, the subrecipient will submit a Certification that funds will not be used to supplant local or other funding.

8. **Grant Term:** The Grant term is the period during which grant funds may be expended. Expiration of the Grant Term does not relieve the subrecipient from the duty to fulfill long term grant requirements, some of which may extend indefinitely. Such long-term requirements may include but are not limited to, maintenance of the completed project, applicable reporting requirements, and obtaining the State's approval before selling or transferring equipment or property acquired with grant proceeds.

9. **Responsibility for Project Costs determined Ineligible for Reimbursement by FHWA:** In the event that Project costs incurred are not reimbursed by the Federal Highway Administration due to the Subrecipient's failure to follow proper federal guidelines and/or the expenditures are found by the State or FHWA to be federally non-participating items, the Subrecipient shall be responsible for 100% of such Project costs.

10. **Limits on Reimbursement:** The State will not reimburse the Subrecipient for premium rate overtime unless the State has given its prior written approval for such overtime. The State will reimburse the Subrecipient for reasonable and necessary expenses actually incurred in the performance of this Grant subject, however, to the reimbursement limitations for state employees. The State will not reimburse the Subrecipient for meals taken during travel not requiring an overnight stay away from home.

11. **Compliance with Cost Principles:** Subrecipient shall comply with the requirements set forth in 2 CFR, Part 225 (superseding OMB Circular A-87 for State and Local Governments Including Schools), 2 CFR, Part 230 (superseding OMB Circular A-122 for Non-Profit Organizations), or 2 CFR, Part 220 (formerly A-21 for Higher Education Institutions) as appropriate for the Subrecipient's type of organization.

12. **Compliance with Administrative Regulations:** Subrecipient shall comply with the requirements of OMB Circular A-102 (State & Local Governments and Schools) or 2 CFR Part 215 (superseding OMB Circular A-110 for Institutions of Higher Education, Hospitals, and Non-Profit organizations) as appropriate for the Subrecipient's type of organization.

13. **Resolution of Grant Disputes.** The parties shall attempt to resolve any disputes that may arise under this Grant by negotiation. Any dispute not resolved by negotiation shall be referred to the State's appropriate Director for determination. If the Subrecipient is aggrieved by the decision of the Director, the Subrecipient may appeal in writing to the Transportation Board, through the Director, within 30 calendar days of the Director's decision, but not thereafter. The notice of appeal shall completely outline the nature and extent of the issue(s) appealed and shall include copies of any and all supporting documentation. The decision of the Transportation Board may be appealed to Vermont Superior Court by either party as provided in 19 V.S.A. 5(d)(4).

14. **Interpretation of Grant.** If an ambiguity or question of intent arises with respect to any provision of this Grant, the Grant will be construed as if drafted jointly between the parties and no presumption or burden of proof will arise favoring or disfavoring either party by virtue of authorship of any of the provisions of this Grant.

15. **Cargo preference act compliance (if applicable).** The contractor/recipient/subrecipient is hereby notified that the Contractor and Subcontractor(s)/recipients and subrecipients are required to follow the requirements of 46 CFR 381.7 (a)-(b), if applicable. For guidance on requirements of Part 381 – Cargo Preference – U.S. Flag Vessels please go to the following web link: https://www.fhwa.dot.gov/construction/cqit/cargo.cfm.

Assurance Appendix A

During the performance of this contract, the contractor, for itself, its assignees, and successors in interest (hereinafter referred to as the "contractor") agrees as follows:

1. **Compliance with Regulations:** The contractor (hereinafter includes consultants) will comply with the Acts and the Regulations relative to Nondiscrimination in Federally-assisted programs of the U.S. Department of Transportation, Federal Highway Administration (FHWA), as they may be amended from time to time, which are herein incorporated by reference and made a part of this contract.

2. **Nondiscrimination:** The contractor, with regard to the work performed by it during the contract, will not discriminate on the grounds of race, color, national origin, sex, age, disability, income-level, or LEP in the selection and retention of subcontractors, including procurements of materials and leases of equipment. The contractor will not participate directly or indirectly in the discrimination prohibited by the Acts and the Regulations as set forth in Appendix E, including employment practices when the contract covers any activity, project, or program set forth in Appendix B of 49 CFR Part 21.

3. **Solicitations for Subcontracts, Including Procurements of Materials and Equipment:** In all solicitations, either by competitive bidding, or negotiation made by the contractor for work to be performed under a subcontract, including procurements of materials, or leases of equipment, each potential subcontractor or supplier will be notified by the contractor of the contractor's obligations under this contract and the Acts and the Regulations relative to Non-discrimination on the grounds of race, color, national origin, sex, age, disability, income-level, or LEP.

4. **Information and Reports:** The contractor will provide all information and reports required by the Acts, the Regulations and directives issued pursuant thereto and will permit access to its books, records, accounts, other sources of information, and its facilities as may be determined by the Recipient or the FHWA to be pertinent to ascertain compliance with such Acts, Regulations, and instructions. Where any information required of a contractor is in the exclusive possession of another who fails or refuses to furnish the information, the contractor will so certify to the Recipient or the FHWA, as appropriate, and will set forth what efforts it has made to obtain the information.

5. **Sanctions for Noncompliance:** In the event of a contractor's noncompliance with the Non-discrimination provisions of this contract, the Recipient will impose such contract sanctions as it or the FHWA may determine to be appropriate, including, but not limited to:

    a. withholding payments to the contractor under the contract until the contractor complies; and/or
    b. cancelling, terminating, or suspending a contract, in whole or in part.

6. **Incorporation of Provisions:** The contractor will include the provisions of paragraphs one through six in every subcontract, including procurements of materials and leases of equipment, unless exempt by the Acts, the Regulations and directives issued pursuant thereto. The contractor will take action with respect to any subcontract or procurement

as the Recipient or the FHWA may direct as a means of enforcing such provisions including sanctions for noncompliance. Provided, that if the contractor becomes involved in, or is threatened with litigation by a subcontractor, or supplier because of such direction, the contractor may request the Recipient to enter into any litigation to protect the interests of the Recipient. In addition, the contractor may request the United States to enter into the litigation to protect the interests of the United States.

Assurance Appendix E

During the performance of this contract, the contractor, for itself, its assignees, and successors in interest (hereinafter referred to as the "contractor") agrees to comply with the following non-discrimination statutes and authorities; including but not limited to:

- Title VI of the Civil Rights Act of 1964 (42 U.S.C. § 2000d *et seq*., 78 stat. 252), (prohibits discrimination on the basis of race, color, national origin), as implemented by 49 C.F.R. § 21.1 et seq. and 49 C.F.R. § 303;

- The Uniform Relocation Assistance and Real Property Acquisition Policies Act of 1970, (42 U.S.C. § 4601), (prohibits unfair treatment of persons displaced or whose property has been acquired because of Federal or Federal-aid programs and projects);
- Federal-Aid Highway Act of 1973, (23 U.S.C. § 324 *et seq*.), (prohibits discrimination on the basis of sex);
- Section 504 of the Rehabilitation Act of 1973, (29 U.S.C. § 794 *et seq*.), as amended, (prohibits discrimination on the basis of disability); and 49 CFR Part 27;
- The Age Discrimination Act of 1975, as amended, (42 U.S.C. § 6101 *et seq*.), (prohibits discrimination on the basis of age);
- Airport and Airway Improvement Act of 1982, (49 USC § 471, Section 47123), as amended, (prohibits discrimination based on race, creed, color, national origin, or sex);
- The Civil Rights Restoration Act of 1987, (102 Stat. 28.), ("*….which restore[d] the broad scope of coverage and to clarify the application of title IX of the Education Amendments of 1972, section 504 of the Rehabilitation Act of 1973, the Age Discrimination Act of 1975, and title VI of the Civil Rights Act of 1964*.");
- Titles II and III of the Americans with Disabilities Act, which prohibit discrimination on the basis of disability in the operation of public entities, public and private transportation systems, places of public accommodation, and certain testing entities (42 U.S.C. §§ 12131 -- 12189) as implemented by Department of Justice regulations at 28 C.F.R. parts 35 and 36, and Department of Transportation regulations at 49 C.F.R. parts 37 and 38;
- The Federal Aviation Administration's Non-discrimination statute (49 U.S.C. § 47123) (prohibits discrimination on the basis of race, color, national origin, and sex);
- Executive Order 12898, Federal Actions to Address Environmental Justice in Minority Populations and Low-Income Populations, which ensures non-discrimination against minority populations by discouraging programs, policies, and activities with disproportionately high and adverse human health or environmental effects on minority and low-income populations;
- Executive Order 13166, Improving Access to Services for Persons with Limited English Proficiency, and resulting agency guidance, national origin discrimination includes discrimination because of limited English proficiency (LEP). To ensure compliance with Title VI, you must take reasonable steps to ensure that LEP persons have meaningful access to your programs (70 Fed. Reg. at 74087 to 74100);
- Title IX of the Education Amendments of 1972, as amended, which prohibits you from discriminating because of sex in education programs or activities (20 U.S.C. 1681 et seq), as implemented by 49 C.F.R. § 25.1 et seq.

ATTACHMENT G
APPLICABLE STANDARDS & DESIGN CRITERIA
August 31, 2023

Current edition of:

A. Federal Highway Administration (FHWA) Manual on Uniform Traffic Control Devices for Streets and Highways (MUTCD)

B. Vermont Agency of Transportation (VTrans) Standard Specifications for Construction, as amended with its most recent General Special Provisions and Supplemental Specifications, but only to the extent not inconsistent with this Grant Agreement.

C. VTrans Vermont State Design Standards

D. VTrans Municipal Assistance Section Guidebook

E. VTrans Utility Accommodation Plan

F. VTrans Access Management Program Guidelines

G. VTrans Hydraulics Manual

H. VTrans Structures Manual

I. VTrans Design Exception Procedure

J. VTrans Right-of-Way Manual

K. VTrans Policy for CADD standards

L. American Association of State Highway and Transportation Officials (AASHTO) Roadside Design Guide

M. AASHTO Guide for the Development of Bicycle Facilities

N. AASHTO Guide for Planning, Design and Operation of Pedestrian Facilities

O. AASHTO Guide for Design of Pavement Structures

P. AASHTO Specifications for Highway Bridges

Q. National Association of City Transportation Officials (NATCO) design guidance

R. U.S. Access Board – Public Right-of-Way Accessibility Guidelines

S. Institute of Transportation Engineers (ITE) Designing Walkable Urban Thoroughfares

T. Transportation Research Board Highway Capacity Manual

U. Approved project environmental document

V. Code of Federal Regulations (CFR), Titles 23 (Highways), 48 (Federal Acquisition Regulations System) (FARS), and 49 (Transportation)

W. VTrans Procedures for Selecting Contractors and Specifications for Contractor Services, Including Customary State Contract Provisions, but only to the extent not inconsistent with this Grant Agreement.

X. U.S. Department of Justice rules implementing the Americans with Disabilities Act (ADA), 28CFR Part 36)

If the Subrecipient believes that there is a discrepancy in the information contained herein or in the above-listed requirements, the Subrecipient shall notify the State. The State, after consultation with the Subrecipient, will, in its sole discretion, determine which requirement takes precedence.

ATTACHMENT H
PERSONNEL REQUIREMENTS AND CONDITIONS

A. Standards of Conduct

1) No employee, officer, or agent of the Subrecipient shall participate in the selection, award, or administration of a contract support by state or federal funds if a conflict of interest, real or apparent, would be involved. Such a conflict would arise when:

- the employee, officer, or agent, or
- any member of his or her immediate family, or
- his or her partner, or
- an organization which employs, or is about to employ, any of the above,

has a financial or other interest in the consultant or contractor selected for award. Subrecipient's officers, employees or agents will neither solicit nor accept gratuities, favors or any gift of any kind or value from consultants, potential consultants, contractors, potential contractors, or parties to sub-agreements. Violation of this standard will result in penalties, sanctions, or other disciplinary actions to the extent permitted by State, Federal or local law.

2) Except where it conflicts with fairness toward competitors, Subrecipient shall avoid any appearance of a conflict of interest in the award of a contract. If there is such an appearance of a conflict of interest wherein a reasonable person might conclude that the contractor was selected for improper reasons, the Subrecipient shall disclose that fact and, regardless, should document its reasons for selection all contractors.

B. The Subrecipient shall employ only qualified personnel in responsible charge of the supervision of work.

C. Except with the approval of the State, during the life of this Agreement, the Subrecipient will not employ:

1) Personnel on the payroll of the State who are directly involved with the awarding, administration, monitoring, or performance of the contract or the Project(s) which are the subject(s) of this Grant Agreement, or

2) Any person so involved within one (1) year of termination of employment with the State.

D. The Subrecipient warrants that no company or person has been employed or retained other than a bona fide employee working solely for the Subrecipient to solicit or secure this Agreement and that no company or person has been paid or has an agreement with the Subrecipient to be paid other than a bona fide employee working solely for the Subrecipient any fee, commission, percentage, brokerage fee, gift or any other

consideration, contingent upon or resulting from the award or making of this Agreement. For breach or violation of the warranty, the State shall have the right to annul this

Agreement without liability to the State and to regain all costs incurred by the State in the performance of the Agreement.

E. The State reserves the right to require the removal from the Project any person employed by the Subrecipient for misconduct, incompetence, or negligence, as determined by the Secretary of the Vermont Agency of Transportation, in the due and proper performance of his/her duties or who neglects or refuses to comply with the requirements of this Agreement.

Vermont League of Cities & Towns

Issue Date: 01/01/2026

Policy Number: PACIF1510-26

CERTIFICATE OF COVERAGE

Named Member
Town of Pomfret
Attn: Ellen DesMeules
5218 Pomfret Road
North Pomfret, VT 05053

Company Affording Coverage

VLCT Property & Casualty Intermunicipal Fund, Inc.
89 Main Street Suite 4
Montpeilier, VT 05602

This is to certify that the policies of coverage listed below have been issued to the named member listed above for the policy period indicated. Notwithstanding any requirement, term, or condition of any contract or other document with respect to which this certificate may be issued or may pertain, the coverage afforded by the policies described herein is subject to all the terms, definitions, exclusions, and conditions of such policies. Note that limits shown may have been reduced by paid claims.

Type of Coverage	Term	Limits of Liability	
Commercial General Liability	01/01/2026 - 01/01/2027	$10,000,000	Per Occurrence
Coverage Includes:			
Premises/Operations			
Products/Completed Operations			
Personal Injury			
Contractual			
Independent Contractors			
Broad Form Property Damage			
Automobile Liability	01/01/2026 - 01/01/2027	$10,000,000	Per Occurrence
Any Auto			
Hired Autos			
Non-Owned Autos			
Comprehensive/Collision		ACV	
Workers Compensation	01/01/2026 - 01/01/2027	Statutory	
And			
Employers Liability		$5,000,000	Per Occurrence and in the Aggregate
Property	01/01/2026 - 01/01/2027	As Per Policy Declarations	

Other: The State of Vermont and its agencies, departments, officers and employees are included as an additional covered party (additional insured) for Automobile Liability, General Liability and Property Damage, but only in respect to operations by or on behalf of the Named Member, as respects the grant. Coverage shall be primary and noncontributory with any other insurance, when required by contract.

Certificate Holder:
State of Vermont
Agency of Transportation-Contract Administration
219 North Main Street, Suite 105
Barre, VT 05641

This Certificate is issued as a matter of information only and confers no rights upon the Certificate Holder. This Certificate does not amend, extend or alter the coverage afforded by the policies above.

Should any of the above described policies be cancelled before the expiration date thereof, the issuing insurer will endeavor to mail 30 days written notice to the Certificate Holder named to the left, but failure to do so shall impose no obligation or liability of any kind upon the insurer, its agents, or representatives.

Authorized Representative: Kelly Kent

Draft – November 15, 2026

TOWN OF POMFRET

APPLICATION FOR TOWN HIGHWAY ACCESS ROAD PERMIT

(Application fee of $100 payable to Town of Pomfret)

Access Road Type (check one): ☐ Private Drive* ☐ Agricultural ☐ Forestry ☐ Temporary/Construction†

Applicant Name: _____ Phone: _____ Email: _____

Applicant Mailing Address: _____ State: _____ Zip: _____

(*Complete only if Applicant is not the Landowner*)

Landowner Name: _____ Phone: _____ Email: _____

Landowner Mailing Address: _____ State: _____ Zip: _____

The undersigned Applicant requests permission to develop, construct, ~~or~~ regrade, or temporarily use the access road type indicated above.

Access Road Location: on the _____ (cardinal direction) of _____ (town highway name) at approximately _____ (feet) from the intersection of _____ (nearest town highway intersection).

Temporary/Construction only: Commencement date _____ Completion date _____

Please provide a brief description of the work to be done: _____

_____

(PROVIDE DETAILED SKETCH OF ACCESS LOCATION AND LAYOUT ABOVE)

The following conditions, standards and restrictions shall apply to the first 20 feet of a newly developed, constructed, ~~or~~ regraded, or temporary access road (measured from the edge of the traveled way) unless waived herein:

General Conditions

1. *Application Fee.* A $100 non-refundable application fee shall be submitted before an application will be considered.
2. *Site Visit.* The Selectboard and Road Commissioner shall make a site visit prior to approving a permit.
3. *Final Site Inspection.* Upon completion of work, the Applicant or its agent shall notify the Town within ten days to arrange a final site inspection.
4. *Noncompliance.* Any work deemed not in compliance with the permit shall be corrected and reinspected for approval.
5. *Final Approval.* Work shall be approved by the Selectboard or its designee before any use of the access may be started.

---

* Each residence is limited to one driveway access.

† A temporary/construction access is an access road used for a limited period in connection with construction or the staging or storage of equipment or materials. It does not count toward the one-driveway limit for a residence.

Design Standards[‡]

1. *Intersection Angle.* Access roads shall be constructed at a 90 degree angle to the town highway.
2. *Minimum Sight Distance.* Sight distances shall be at least as shown in the table below in both directions when viewed from a ~~point 15 feet back from edge of the traveled way and at a~~ height of eye of 3.5 feet on the drive to a height of eye of 2.0 feet on the roadway~~. The "posted speed" for unposted~~ , from a point 15 feet (paved highways) or 10 feet (unpaved highways) back from the edge of the traveled way. Unposted Class ~~3~~2 Town highways shall be deemed ~~to be 30~~posted at 45 mph and all other unposted Town highways at 25 mph.

Minimum Sight Distance

Posted Speed (mph)	***Minimum Sight Distance (feet)***
25	155
30	200
35	250
40	305
45	360

3. *Access Road Width.* Access roads shall be 16 feet wide and graded and sloped such that water from the access road does not enter the Town highway. It is recommended that the driveway or access road have a grade dropping six inches in 10 feet before extending either up or down slope.
4. *Culverts.* Culverts shall be installed if deemed necessary by the Selectboard or its designee and shall conform to standards described in Section 5.3(h) of the Pomfret Highway Ordinance.
5. *Vegetation.* Vegetation and trees shall be removed as necessary to provide for visibility and safety.

Additional Conditions for Temporary/Construction Access

1. *Permit Term.* Use of the access shall begin and end within the dates stated above, unless extended by the Selectboard.
2. *Highway Protection.* The pavement edge shall be protected and any damage to the Town highway promptly repaired.
3. *Traffic Control.* Trained flaggers shall be used when construction vehicles enter or exit the Town highway, if required.
1. *Site Restoration.* At the end of the permit term, the access area shall be restored to its prior condition.

The undersigned Applicant agrees to adhere to the conditions, standards and restrictions forming a part of this permit, and understands that this permit, if issued, will be issued in accordance with 19 V.S.A. 1111 and the Pomfret Highway Ordinance and may be voided in the event of misrepresentation, substantial inaccuracy or failure to undertake development, construction, or regrading of the access road within one year of the date of approval. If Applicant is not the Landowner, Applicant has provided the Landowner with a copy of this completed Application and obtained the Landowner's signature below.

Applicant Signature	Applicant Printed Name	Date

(*Complete only if Applicant is not the Landowner*)

The undersigned Landowner acknowledges they have received a copy of this completed Application.

[‡] Any of the standards listed herein may be waived or varied upon the Applicant's request and following consideration by the Selectboard and Road Commissioner of public and private interests, topography, adequacy of highway design, ease of snow removal, drainage, and maintenance of safe conditions in all seasons for the traveling public.

Landowner Signature	Landowner Printed Name	Date

[*Remainder of page intentionally blank. Application form continues on next page.*]

OFFICIAL USE ONLY

Application fee of $100 received on _____, 20_____ by _____.

Permit expiration date (Temporary/Construction only): _____, 20_____.

Culvert Required (*min. 18-inch diameter*)? ☐ Yes ☐ No

Additional conditions, standards and restrictions; waivers of design standards (if any):

_____

_____

_____

_____

_____

_____

_____

_____

_____

PERMIT APPROVED this _____ day of _____, 20_____.

_____ _____

Road Commissioner Selectboard Chair

FINAL APPROVAL. The work described in this permit has been constructed in accordance with the above conditions, standards and restrictions and is acceptable under State and local regulations.

_____ _____ _____

Road Commissioner Selectboard Chair Date

Form adopted by the Pomfret Selectboard January 4, 2023~~.~~, as amended _____, 2026. Supersedes all prior dated forms.



Welcome to the official town website.

Notices

General Election: Tuesday, November 3	Oct 23, 2026
For Sale: F550 Truck and Winter Setup	Oct 14, 2026
Veterans' Memorial Fundraiser	Oct 14, 2026
Pay Online with MuniciPay	Oct 14, 2026
Foliage Season Traffic Pattern Changes	Oct 13, 2026

Town of Pomfret Selectboard
DRAFT Meeting Minutes
November 4, 2026

Present: Benjamin Brickner, John Peters, Eric Chase, Emily Grube, Kyle Hansen

Public: Frank Rogers, Art Lewin, Ed Scheuermann, Michael Miller

1. **Call to Order –** Ben called the meeting to order at 7:00 pm. John participated remotely.
2. **Agenda Review –** Ben proposed adding a readout of his conversation with the Vermont Bond Bank regarding the paving project, following Item 6A, and a letter to the editor of the Vermont Standard thanking the community for its patience with the fall road closure, preceding Warrants. Eric moved and Emily seconded. Unanimous roll-call vote.
3. **Public Comment –** None.
4. **Town Administrator Report –** Mariel was delayed and then unable to attend.
5. **Road Foreman Report –** Frank reported that mowing of the dirt roads and leaf blowing are complete, maintenance is underway on culverts, water bars and equipment, and most of the grading is complete. The snow fence is up. Eric asked about the Weekly Foreman Report, and Frank agreed to revisit the form so that he can use it. Emily asked what the road crew's plan is to remove the trees in the strike zone, which will be paid for with grant funding. Frank stated that he will be forwarding an email to Ben for review and signature and that the work would be done within the grant term. Eric and Frank briefly discussed that the $50,000 grant will cover work on approximately 800 feet of guardrail on Pomfret Road and the removal of 12–14 trees.
6. **Items for Discussion or Vote**
    a. **FY 2028 Budget Discussion –** The Fire Department will join the next meeting. The Selectboard and Frank completed a first pass through the highway budget. Frank reported that Pike has communicated a 12% increase on materials costs across the board, effective January 1, and Frank and the Selectboard worked through that increase. Eric suggested that the Town allow the highway equipment reserve to also fund large repair bills for equipment no longer covered by warranty, which the Selectboard will consider when it takes up reserve funding. Frank will ask the Capital Planning Committee for its updated recommendations.
    b. **Vermont Bond Bank –** Ben reported on his conversation with the Vermont Bond Bank; no action was required. There are two annual cycles, winter and summer, which would determine when the Town will need to apply. Because money from the summer cycle would likely not be available until August, the Town has the option to take a short-term bond anticipation note from Mascoma so that work can begin earlier, to be paid off with the bond proceeds. The interest rate through the Bond Bank is a fixed market rate, and the term may not exceed the life of the asset. Voters would authorize a maximum amount, which the Town could borrow in phases as needed. An attorney from the Bond Bank's approved list would be needed to ensure the process is completed correctly. Emily raised the possibility of not taking a bond and instead putting the equivalent of the annual bond payment directly into road work in phases, avoiding the interest payments. The Selectboard will continue to consider these options.

c. **F550 Sale Bids –** Ben checked with Mariel, who reported that no bids had been submitted. Frank will place a for-sale sign on the truck, with the plow and sander mounted.

d. **Culvert #59 Replacement RFP –** Ben spoke with Tyler Billingsley of East Engineering. The original contract that the Town signed included engineering plans and an RFP for both culverts. Tyler will prepare those for the Selectboard to review at the next meeting. Tyler suggested that the Town submit permit applications immediately, as permit review is expected to take four to six months. Emily moved and Eric seconded to authorize the Selectboard Chair to sign the necessary permit applications. Unanimous roll-call vote.

e. **Personnel Policy Updates –** Postponed to the November 18 meeting.

f. **Statement of Support for the Veterans Memorial Dedication –** Ben prepared a statement of support for the Historical Society's dedication of the Veterans Memorial on November 11. Emily moved and Kyle seconded to approve and sign the statement. Unanimous roll-call vote.

g. **Albertsons Opioid Settlement Participation Agreement –** Ben explained that, as with prior national opioid settlements, the agreement provides small periodic payments in exchange for a release of claims and cannot be negotiated. The options are to sign it as-is, have an attorney review it, or not sign. Because the payments are small, attorney review would not be cost effective. Emily moved and John seconded to authorize the Selectboard Chair to sign the agreement as-is. Unanimous roll-call vote.

h. **Follow Up on Executive Session Matter –** Ben will follow up with Mariel.

i. **Foliage Letter to the Editor –** Ben proposed updating the Selectboard's letter from prior years thanking the community for its patience with the fall foliage road closure and submitting it to the Vermont Standard. John moved and Emily seconded. Unanimous roll-call vote.

j. **Warrants –** John moved and Eric seconded approval of the following warrants for payment:

27036	$	10,159.83	Payroll
27039		36,345.53	A/P (revised)

Unanimous roll-call vote. The A/P warrant was revised to add the second half of the FY 2027 Windsor County tax payment.

k. **Approval of October 21 and October 30, 2026 Minutes –** Eric moved and Kyle seconded to approve the minutes of the October 21, 2026 meeting and the October 30, 2026 special meeting as presented. Unanimous roll-call vote.

7. **Meeting Wrap Up**

a. **Correspondence –** None.

b. **Review of Assignments –** Frank will follow up with the Capital Planning Committee, place a for-sale sign on the F550, and send Ben the strike zone grant email. Ben will follow up with Mariel about the executive session matter and with Sheriff-elect Claude Want to invite him to a meeting.

c. **Agenda for Next Meeting –** FY 2028 budget (including the Fire Department), Culvert #59 Replacement RFP from East Engineering, meeting with the Sheriff-elect, and personnel policy updates.

8. **Adjournment –** Eric moved and John seconded adjournment. Unanimous roll-call vote. The meeting was adjourned at 8:31 pm.